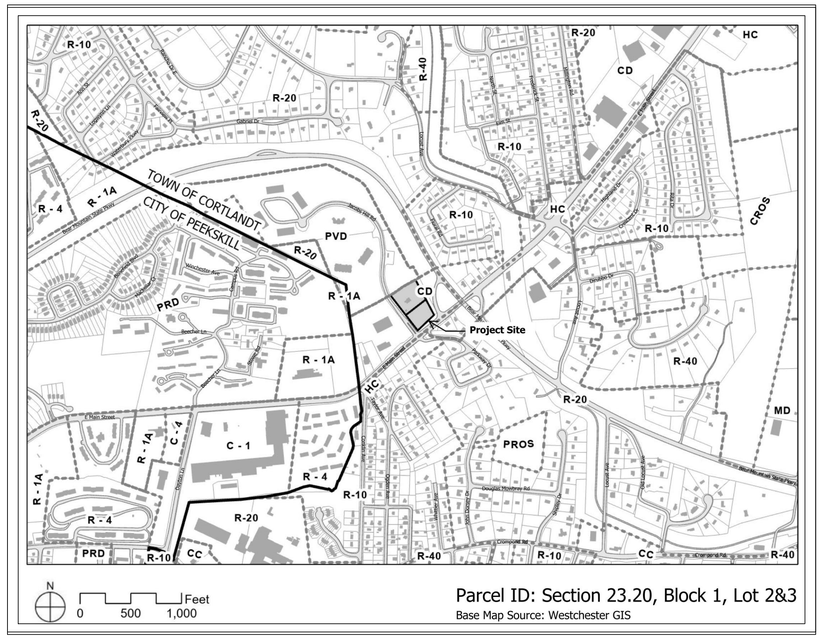


SITE LOCATION MAP
N.T.S.

SPECIAL DISTRICTS:

FIRE: MOHEGAN FIRE DISTRICT
EMS: CORTLANDT AMBULANCE DISTRICT #3 (MOHEGAN EMS)
POLICE: WESTCHESTER COUNTY POLICE AND NYS POLICE
SCHOOLS: LAKELAND CENTRAL SCHOOL DISTRICT
WATER: CORTLANDT CONSOLIDATED WATER DISTRICT
SEWER: PEEKSKILL SANITARY SEWER DISTRICT

PROJECT SITE
1"=50'

LIST OF DRAWINGS


| | |
|---|---|
| C-1 | TITLE SHEET |
| C-101 | EXISTING CONDITIONS & CONSTRAINTS PLAN |
| C-102 | SITE PLAN |
| C-201 | GRADING & UTILITY PLAN |
| C-202 | SECTIONS |
| C-301 | STRIPING & SIGN PLAN |
| C-401 | TREE PLAN |
| C-501 | EROSION CONTROL PLAN |
| C-601 | DETAILS (SHEET 1) |
| C-602 | DETAILS (SHEET 2) |
| C-603 | DETAILS (SHEET 3) |
| L-701 | LANDSCAPE PLAN |


LIST OF DRAWINGS

| NO. | REVISION | DATE |
|---|---|---|
| 1 | ISSUED TO PLANNING BOARD | 7/19/2023 |

# CORTLANDT MANOR HOTEL

## SITE PLAN APPROVAL DRAWINGS
## 2054 EAST MAIN STREET
## CORTLANDT, NEW YORK

CONSULTANT TEAM


**Owner/Applicant**
Bilal Ahmad
116 Courtyard Drive
Oneonta, NY 13820
Tel: 315-219-2156

**Civil Engineer**
DTS Provident Design Engineering, LLP
One North Broadway
White Plains, NY 10601
Tel: 914-428-0010
dtsprovident.com

**Landscape Architect**
Keplinger Freeman Associates, LLC
6320 Fly Road, Suite 109
East Syracuse, NY 13057
Tel: 315-445-7980
keplingerfreeman.com

**Architect**
Rod A. VanDerWater Architect, P.C.
7301 Barberry Lane
Manlius, NY 13104
Tel: 315-415-9988
alestaloetzel.com

**Attorney**
Zarin & Steinmetz, LLP
81 Main Street, Suite 415
White Plains, NY 10601
Tel: 914-682-7800
zarin-steinmetz.com

Attorney
Zarin & Steinmetz, LLP
81 Main Street, Suite 415
White Plains, NY 10601
Tel: 914-682-7800

Architect
Rod A. VanDerWater Architect, p.c.
7301 Barberry Lane
Manlius, NY 13104
Tel: 315-415-9988

Landscape Architect
Keplinger Freeman Associates, LLC
6320 Fly Road, Suite 109
East Syracuse, NY 13057
Tel: 315-445-7980

Surveyor
Donald R. Stedge, P.L.S.
112 Murray Avenue
Goshen, NY 10924
Tel: 845-325-9734

Owner/applicant
Bilal Ahmad
116 Courtyard Drive
Oneonta, NY 13820
Tel: 315-219-2156

DTS · PROVIDENT
Intelligent Land Use
DTS Provident Design Engineering, LLP
One North Broadway White Plains, NY 10601
P: 914.428.0010
F: 914.428.0017



Under New York State Education Law Article 145 (Engineering), Section 7209 (2), It Is A Violation Of This Law For Any Person, Unless Acting Under The Direction Of A Licensed Professional Engineer, To Alter This Document

© DTS Provident Design Engineering, LLP
Certificate Of Authorization #0017846


CORTLANDT MANOR HOTEL
2054 EAST MAIN STREET
TOWN OF CORTLANDT, NY
Section 23.20, Block: 1, Lots: 2 & 3

TITLE:
TITLE SHEET

Seal
STATE OF NEW YORK · PETER J. GREGORY · No. 071226 · LICENSED PROFESSIONAL ENGINEER

| | |
|---|---|
| Scale: | AS NOTED |
| Date: | 04/26/2023 |
| Drawn By: | KMM |
| Checked By: | PJG |
| Project No.: | 1021 |
| Sheet No.: | 1 of 12 |
| Dwg. No.: | C-1 |

Q:\PROJECTS-DTSPV\1021 - Cortlandt Hotel\AutoCAD\SPA\C-1 Cover Sheet.dwg

| SLOPE AREA TABLE (ENTIRE LOT AREA) | | | | | |
|---|---|---|---|---|---|
| NO. | SLOPE CLASS MIN. | SLOPE CLASS MAX. | AREA (s.f.) | % OF LOT AREA | COLOR |
| 1 | 0.00% | 15.00% | 45,614 | 42.8% | |
| 2 | 15.00% | 20.00% | 20,443 | 19.2% | |
| 3 | 20.00% | 30.00% | 26,878 | 25.2% | |
| 4 | 30.00% | MAX. | 13,656 | 12.8% | |

| SLOPE RANGE - DISTURBED AREA ONLY | | | | |
|---|---|---|---|---|
| NO. | SLOPE CLASS MIN. | SLOPE CLASS MAX. | AREA (s.f.) | COLOR |
| 1 | 0.00% | 15.00% | 42,858 | |
| 2 | 15.00% | 20.00% | 20,443 | |
| 3 | 20.00% | 30.00% | 24,565 | |
| 4 | 30.00% | MAX. | 6,781 | |

| WETLAND CHART | | | |
|---|---|---|---|
| HATCH | CATEGORY | AREA | DISTURBANCE AREA |
| | WETLANDS | 1,677 SF | 1,389 SF |
| | WETLAND BUFFER | 27,924 SF | 24,231 SF |

| Table of Soil Characteristics | | | | | |
|---|---|---|---|---|---|
| Ref: | NRCS Web Soil Survey, National Cooperative Soil Survey | | | | |
| Map Unit Symbol | Map Unit Name & Description | Hydro Group | Depth to Bedrock | Depth to Water | Drainage Class |
| PnC | Paxton fine sandy loam, 8 to 15 percent slopes | C | 20" TO 39" | 18" to 37" | Well Drained |
| LcB | Leicester loam, 2 to 8 percent slopes, very stony | A/D | > 80" | 6" TO 18" | Somewhat Poorly Drained |

| NO. | REVISION | DATE |
|---|---|---|
| 1 | ISSUED TO PLANNING BOARD | 7/19/2023 |

## CONSTRAINTS LEGEND

- PROPERTY LINE
- LIMITS OF DISTURBANCE
- 400 — EXISTING CONTOUR LINE
- 100 FT. WETLAND SETBACK
- WL-A — LOCAL FLAGGED WETLAND LINE
- 8" maple — EXISTING TREE W/ SIZE & SPECIES

30 20 10 0 30 60
SCALE IN FEET


Attorney: Zarin & Steinmetz, LLP
81 Main Street, Suite 415
White Plains, NY 10601
Tel: 914-682-7800

Architect: Rod A. VanDerWater Architect, p.c.
7301 Barberry Lane
Manlius, NY 13104
Tel: 315-415-9988

Landscape Architect: Keplinger Freeman Associates, LLC
6320 Fly Road, Suite 109
East Syracuse, NY 13057
Tel: 315-445-7980

Surveyor: Donald R. Stedge, P.L.S.
112 Murray Avenue
Goshen, NY 10924
Tel: 845-325-9734

Owner/applicant: Bilal Ahmad
116 Courtyard Drive
Oneonta, NY 13820
Tel: 315-219-2156

DTS · PROVIDENT
Intelligent Land Use
DTS Provident Design Engineering, LLP
One North Broadway White Plains, NY 10601
P: 914.428.0010
F: 914.428.0017



Under New York State Education Law Article 145 (Engineering), Section 7209 (2), It Is A Violation Of This Law For Any Person, Unless Acting Under The Direction Of A Licensed Professional Engineer, To Alter This Document

© DTS Provident Design Engineering, LLP
Certificate Of Authorization #0017846


# CORTLANDT MANOR HOTEL

2054 EAST MAIN STREET
TOWN OF CORTLANDT, NY
Section 23.20, Block: 1, Lots: 2 & 3

TITLE:

## EXISTING CONDITIONS AND CONSTRAINTS PLAN

Seal: STATE OF NEW YORK · PETER J. GREGORY · LICENSED PROFESSIONAL ENGINEER · No. 071226

| | |
|---|---|
| Scale: | 1" = 30' |
| Date: | 04/26/2023 |
| Drawn By: | KMM |
| Checked By: | PJG |
| Project No.: | 1021 |
| Sheet No.: | 2 of 12 |
| Dwg. No.: | C-101 |

Q:\PROJECTS-DTSP\1021 - Cortlandt Hotel\AutoCAD\SPA\C-101 Constraints Map.dwg

| TOWN OF CORTLANDT | | | |
|---|---|---|---|
| TABLE OF DIMENSIONAL REGULATIONS , NON RESIDENTIAL DISTRICTS | | | |
| SECTION 307-17 - ATTACHMENT 5 | | | |
| SECTION: 23.20, BLOCK: 1, LOT 2 & 3 | | | |
| ZONING DISTRICT: CD DESIGNED COMMERCIAL DISTRICT | | | |
| PROPOSED HOTEL | | | |
| ZONING REQUIREMENT | REQUIRED/ PERMITTED | PROVIDED | COMMENTS |
| MINIMUM LOT AREA (S.F.) | 80,000 | 106,591 | CONFORMS |
| MINIMUM LOT WIDTH (FT.) | 200 | 253.50' | CONFORMS |
| MAXIMUM HEIGHT | 3 STORIES/ 35 FEET | 5 STORIES / 48'-10" | VARIANCE REQUIRED |
| FRONT YARD SETBACK (FT.) | 75 | 88.32' | CONFORMS |
| SIDE YARD SETBACK (FT.) | 50 | 44.41' | VARIANCE REQUIRED |
| REAR YARD SETBACK (FT.) | 50 | 163 | CONFORMS |
| MAXIMUM BUILDING COVERAGE (% OF LOT AREA) | 20% (21,318 S.F.) | 16.11% (17,174 S.F.) | CONFORMS |
| MINIMUM LANDSCAPE COVERAGE (% OF LOT AREA) | 25% (26,648 S.F.) | 36% | CONFORMS |

| TOWN OF CORTLANDT | | | |
|---|---|---|---|
| ADDITIONAL REQUIREMENTS | | | |
| PROPOSED HOTEL | | | |
| ZONING REQUIREMENT | REQUIRED/ PERMITTED | PROPOSED | COMMENTS |
| LANDSCAPE BUFFER | 25 FEET, 3 SIDES | NORTHEAST: 0 FEET<br>SOUTHEAST: 28 FEET<br>SOUTHWEST: 0 FEET | VARIANCE REQUIRED |

| TOWN OF CORTLANDT | |
|---|---|
| SCHEDULE OF PARKING REQUIREMENTS AS PER SECTION 301-29 | |
| USE:<br><br>HOTEL | MINIMUM NUMBER OF SPACES<br><br>1 PER ROOM PLUS<br>1 PER EMPLOYEE ON MAXIMUM SHIFT |
| NUMBER OF PROPOSED ROOMS = 93<br>NUMBER OF EMPLOYEES ON MAXIMUM SHIFT = 7 | |
| REQUIRED NUMBER OF SPACES<br>93 SPACES + 7 SPACES<br><br>100 SPACES REQUIRED | |
| NUMBER OF PROPOSED PARKING SPACES:<br>93 SPACES WITH 4 ACCESSIBLE SPACES*<br>-<br>*VARIANCE REQUIRED | |
| | |
| TOTAL AREA OF PERIMETER OF PARKING AREA = 15,282 S.F.<br>5% OF TOTAL OF PARKING AREA = 765 S.F. | |
| LANDSCAPE AREA PROVIDED AROUND PARKING AREA = 5,624 S.F. | |

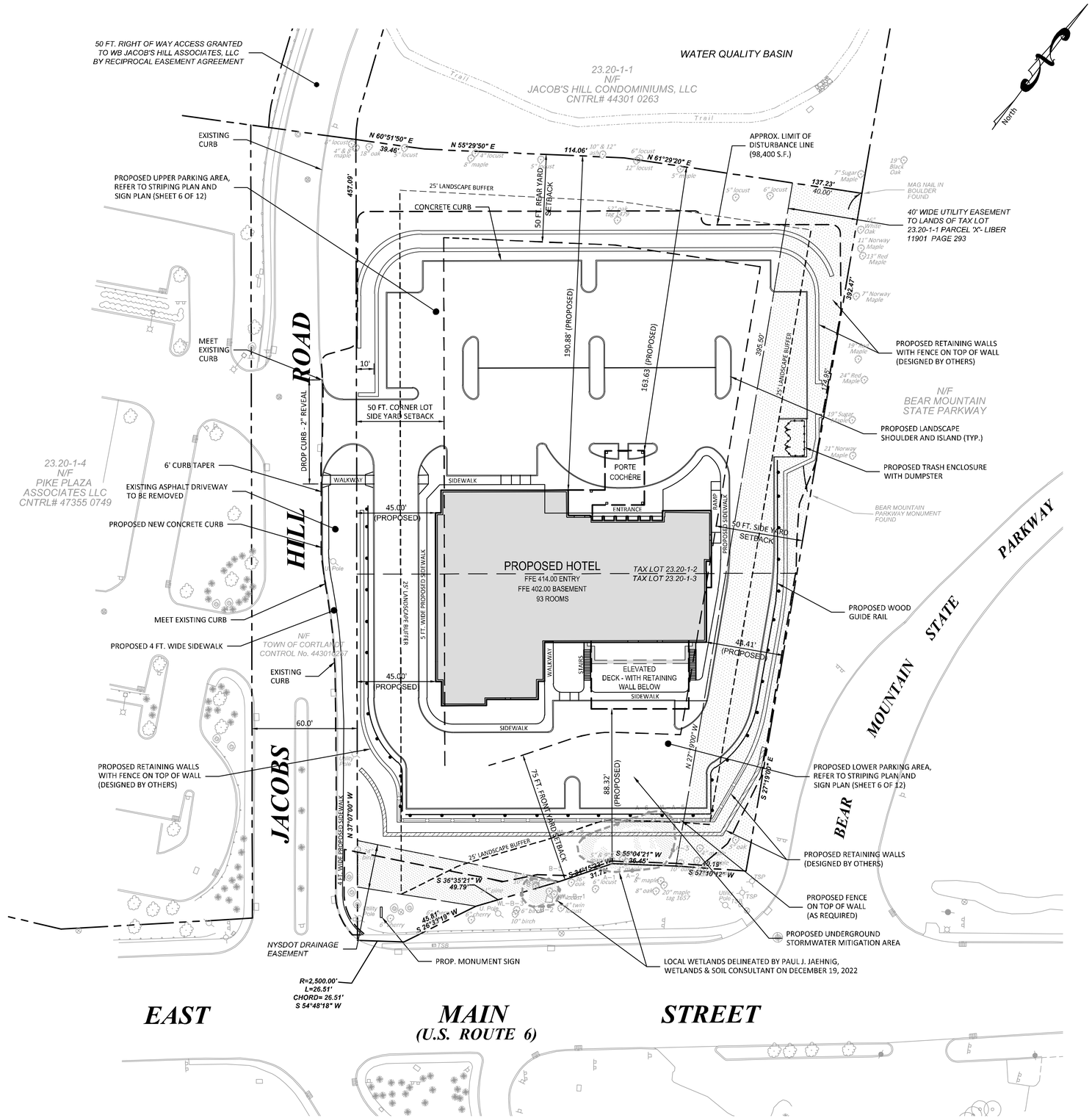


| NO. | REVISION | DATE |
|---|---|---|
| 1 | ISSUED TO PLANNING BOARD | 7/19/2023 |

## SITE PLAN LEGEND

- PROPERTY LINE
- PROPOSED BUILDING LINE
- SETBACK/YARD LINE
- EXISTING CURB
- PROPOSED CONC. CURB
- PROPOSED DROP CURB
- PROPOSED CONCRETE SIDEWALK
- PROPOSED CURB RAMP
- PROPOSED RETAINING WALL
- PROPOSED GUIDERAIL

30 20 10 0 30 60
SCALE IN FEET


Attorney: Zarin & Steinmetz, LLP
81 Main Street, Suite 415
White Plains, NY 10601
Tel: 914-682-7800

Architect: Rod A. VanDerWater Architect, p.c.
7301 Barberry Lane
Manlius, NY 13104
Tel: 315-415-9988

Landscape Architect: Keplinger Freeman Associates, LLC
6320 Fly Road, Suite 109
East Syracuse, NY 13057
Tel: 315-445-7980

Surveyor: Donald R. Stedge, P.L.S.
112 Murray Avenue
Goshen, NY 10924
Tel: 845-325-9734

Owner/applicant: Bilal Ahmad
116 Courtyard Drive
Oneonta, NY 13820
Tel: 315-219-2156

DTS · PROVIDENT
Intelligent Land Use
DTS Provident Design Engineering, LLP
One North Broadway White Plains, NY 10601
P: 914.428.0010
F: 914.428.0017



Under New York State Education Law Article 145 (Engineering), Section 7209 (2), It Is A Violation Of This Law For Any Person, Unless Acting Under The Direction Of A Licensed Professional Engineer, To Alter This Document

© DTS Provident Design Engineering, LLP
Certificate Of Authorization #0017846


# CORTLANDT MANOR HOTEL

2054 EAST MAIN STREET
TOWN OF CORTLANDT, NY
Section 23.20, Block: 1, Lots: 2 & 3

TITLE:

## SITE PLAN

Seal: STATE OF NEW YORK · PETER J. GREGORY · No. 071226 · LICENSED PROFESSIONAL ENGINEER

| | |
|---|---|
| Scale: | 1" = 30' |
| Date: | 04/26/2023 |
| Drawn By: | KMM |
| Checked By: | PJG |
| Project No.: | 1021 |
| Sheet No.: | 3 of 12 |
| Dwg. No.: | C-102 |

O:\PROJECTS-DTSP\1021 - Cortlandt Hotel\AutoCAD\SPA\C-102 SitePlan.dwg

GENERAL NOTES

1. EXISTING TOPOGRAPHIC AND UTILITY INFORMATION DATA TAKEN FROM A SURVEY PREPARED BY DONALD R. STEDGE, P.L.S.
2. CONTRACTOR SHALL COMPLY WITH ALL APPLICABLE PROVISIONS OF INDUSTRIAL CODE RULE 753 REGULATIONS. EXCAVATORS AND CONTRACTORS MUST CONTACT DIG SAFELY NEW YORK (STAKEOUT REQUESTS: 1-800-962-7962 OR 811) AT LEAST 48 HOURS IN ADVANCE OF ANY MECHANIZED DIGGING OR EXCAVATION WORK TO ENSURE UNDERGROUND UTILITY LINES ARE MARKED.
3. THE CONTRACTOR SHALL INSTALL TEMPORARY CONSTRUCTION FENCE TO PROTECT ALL AREAS OUTSIDE OF THE LIMITS OF DISTURBANCE.
4. CONTRACTOR SHALL VERIFY ALL EXISTING SITE CONDITIONS, BOTH ABOVE AND BELOW THE SURFACE, PRIOR TO COMMENCING WORK. ANY DISCREPANCIES BETWEEN THE INFORMATION SHOWN ON THE DRAWINGS SHALL BE BROUGHT TO THE ATTENTION OF THE OWNER'S FIELD REPRESENTATIVE AND/OR ENGINEER PRIOR TO COMMENCING WORK.
5. CONTRACTOR SHALL COMPLY WITH ALL APPLICABLE CODES, RULES AND REGULATIONS GOVERNING THE WORK. THE CONTRACTOR SHALL COORDINATE DEMOLITION WITH THE APPLICABLE AGENCIES, UTILITY COMPANIES AND/OR SUB-CONTRACTORS.
6. THE CONTRACTOR IS ADVISED THAT OTHER CONTRACTORS AND/OR UTILITY COMPANIES MAY BE WORKING IN THE AREA AT THE SAME TIME. THE CONTRACTOR SHALL COORDINATE WORK SUCH THAT THERE ARE NO CONFLICTS IN OPERATION.

STORM DRAINS

1. SDR 35 PVC AND FITTINGS FOR PIPES 10" DIAMETER AND SMALLER.
2. ALUMINIZED CMP PIPE SHALL BE USED FOR PIPE DIAMETER OF 12" AND GREATER.
3. PIPE BEDDING AND INITIAL BACKFILL MATERIAL SHALL BE COMPACTED SCREENED GRAVEL WELL GRADED IN SIZE FROM 3/8 INCH TO 3/4 INCH OR SUCH OTHER SIZED AS MAY BE APPROVED. THE GRAVEL SHALL CONSIST OF CLEAN, HARD, AND DURABLE PARTICLES OR FRAGMENTS, FREE FROM DIRT, VEGETATION, OR OTHER OBJECTIONABLE MATTER AND FREE FROM AN EXCESS OF SOFT, THIN ELONGATED, LAMINATED OR DISINTEGRATED PIECES.

SANITARY SEWERS

1. PRODUCTS
   A. PIPE SHALL BE SERVICE WEIGHT CAST IRON SOIL PIPE AND FITTINGS AND SHALL CONFORM TO THE REQUIREMENTS OF CISPI STANDARD 301, ASTM A888 OR ASTM SPECIFICATION A74, LATEST EDITION. JOINTS FOR HUB AND SPIGOT PIPE SHALL BE INSTALLED WITH COMPRESSION GASKETS CONFORMING TO THE REQUIREMENTS OF ASTM SPECIFICATIONS C564, LATEST EDITION.
   B. PIPE BEDDING AND INITIAL BACKFILL MATERIAL SHALL BE COMPACTED SCREENED GRAVEL WELL GRADED IN SIZE FROM 3/8 INCH TO 3/4 INCH OR SUCH OTHER SIZED AS MAY BE APPROVED. THE GRAVEL SHALL CONSIST OF CLEAN, HARD, AND DURABLE PARTICLES OR FRAGMENTS, FREE FROM DIRT, VEGETATION, OR OTHER OBJECTIONABLE MATTER AND FREE FROM AN EXCESS OF SOFT, THIN ELONGATED, LAMINATED OR DISINTEGRATED PIECES.
   C. SHEAR RING COUPLINGS SHALL CONFORM TO THE REQUIREMENTS OF ASTM D5926 STANDARD SPECIFICATION FOR POLY (VINYL CHLORIDE) (PVC) GASKETS FOR DRAIN, WASTE, AND VENT (DWV), SEWER, SANITARY, AND STORM PLUMBING SYSTEMS.
2. INSTALLATION
   A. PIPE SHALL BE SUPPORTED ON A MINIMUM OF SIX (6) INCHES OF COMPACTED SCREENED GRAVEL SPREAD IN LAYERS OF UNIFORM THICKNESS. NO PIPE OR FITTING SHALL BE PERMANENTLY SUPPORTED ON SADDLES, BLOCKING, OR STONES. PIPE BEDDING AND INITIAL BACKFILL MATERIAL SHALL BE INSTALLED IN LAYERS NOT EXCEEDING 6 INCHES IN DEPTH. INITIAL BACKFILL MATERIAL WITHIN ONE (1) FOOT HORIZONTALLY AND ONE (1) FOOT ABOVE THE CROWN OF THE PIPE SHALL BE PLACED BY HAND AND REQUIRES HAND COMPACTION. EACH LAYER OF GRAVEL SHALL BE COMPACTED TO A MINIMUM DENSITY OF NINETY-FIVE (95) PERCENT OF MAXIMUM DENSITY OF THE SOIL AS DETERMINED BY THE STANDARD PROCTOR TEST AASHTO DESIGNATION T-99.
   B. STANDARD BACKFILL SHALL BE PLACED AND COMPACTED IN MAXIMUM ONE (1) FOOT LAYERS. EACH LAYER SHALL BE COMPACTED BY APPROVED MECHANICAL TAMPING MACHINES TO A DENSITY EQUAL TO THAT OF ADJACENT ORIGINAL MATERIAL, BUT NOT LESS THAN 95% OF THE MAXIMUM DRY DENSITY AS DEFINED BY ASTM D-1557, LATEST ISSUE FOR THAT SOIL.

WATER SERVICE

1. THE CONTRACTOR SHALL COMPLY WITH THE APPLICABLE REQUIREMENTS OF THE TOWN OF CORTLANDT FOR WORK WITHIN THE ADJACENT PUBLIC RIGHT-OF-WAYS.
2. CROSS CONNECTION CONTROL SHALL BE INTERNAL TO THE PROPOSED BUILDINGS. REFER TO PLANS PREPARED BY THE MECHANICAL ENGINEER FOR ADDITIONAL DETAILS.
3. PRODUCTS
   A. TYPE K COPPER PIPE.
4. INSTALLATION
   A. BEDDING & BACKFILL
      (1) CONTINUOUS AND UNIFORM BEDDING SHALL BE PROVIDED IN THE TRENCH FOR ALL BURIED PIPE. INITIAL BACKFILL MATERIAL SHALL BE TAMPED IN LAYERS AROUND THE PIPE AND TO A SUFFICIENT HEIGHT ABOVE THE PIPE TO ADEQUATELY SUPPORT AND PROTECT THE PIPE. STONE, DECOMPOSED BEDROCK OR BEDROCK FOUND IN THE TRENCH SHALL BE REMOVED TO A DEPTH OF AT LEAST SIX (6) INCHES BELOW THE BOTTOM OF THE PIPE. PIPE BEDDING SHALL BE A MINIMUM OF SIX (6) AND A MAXIMUM OF TWELVE (12) INCHES. INITIAL BACKFILL SHALL BE PROVIDED TO A DEPTH OF ONE (1) FEET ABOVE THE PIPE.
      (2) BACKFILL SHALL BE PLACED AND COMPACTED IN MAXIMUM ONE (1) FOOT LAYERS. EACH LAYER SHALL BE COMPACTED BY APPROVED MECHANICAL TAMPING MACHINES TO A DENSITY EQUAL TO THAT OF ADJACENT ORIGINAL MATERIAL, BUT NOT LESS THAN 95% OF THE MAXIMUM DRY DENSITY AS DEFINED BY ASTM D-1557, LATEST ISSUE FOR THAT SOIL.
   B. COVER
      (1) THE MAIN SHALL HAVE A MINIMUM COVER OF 4'-0".

ONSITE STORMWATER SYSTEM SCHEDULE

| HOLE NO. | PROPOSED STORMWATER AREA DEEP TEST PIT DESCRIPTION APRIL 20, 2023 | MOTTLING/ GRND. WATER ELEV. | IMPERVIOUS LAYER ELEV. | TOTAL DEPTH |
|---|---|---|---|---|
| DTP 1 | G.L. LAWN, 0"-6" TOPSOIL, 6"-24" LOOSE COMPACTED FINE SAND AND LOAM, 24"-40" MODERATELY COMPACTED FINE SANDS WITH COBBLES, 40" LEDGE | NONE | 40" | 40" |
| DTP2 | G.L. LAWN, 0"-6" TOPSOIL, 6"-24" FINE SANDY LOAM WITH TRACES OF SILTS, 24"-50" MODERATELY COMPACTED FINE TO MEDIUM SANDY LOAM, 50" LEDGE | NONE | 50" | 50" |
| DTP 3 | G.L. LAWN, 0"-4" TOPSOIL, 4"-18" FINE SANDY LOAM, 18" LEDGE | NONE | 18" | 18" |
| DTP 4 | G.L. LAWN, 0"-6" TOPSOIL, 6"-30" BROWN SANDY LOAM, 30"-54" GRAY TIGHTLY COMPACTED LOAMY SAND AND SILT, 54"-80" MODERATELY COMPACTED FINE TO MEDIUM SANDY LOAM, 80" LEDGE | NONE | NONE | 80" |
| DTP 5 | G.L. LAWN, 0"-6" TOPSOIL, 6"-42" LOOSE BROWN LOAM AND FINE SANDS WITH ROCK FRAGMENTS, 42"-52" GRAY COMPACTED SAND, 52"-96" MODERATELY COMPACTED FINE TO MEDIUM SAND WITH SOME SILT | 90" | NONE | 96" |
| DTP 6 | G.L. LAWN, 0"-6" TOPSOIL, 6"-18" LOOSE FINE SANDY LOAM, 18"-74" MODERATELY COMPACTED FINE TO MEDIUM SANDY LOAM WITH FEW BOULDERS, 74" LEDGE | NONE | 74" | 74" |
| DTP 7 | G.L. LAWN, 0"-6" TOPSOIL, 6"-72" MODERATELY COMPACTED SANDY LOAM WITH ROCK FRAGMENTS, 72"-100" BROWN SILTY LOAM WITH FINE SANDS | 90" | NONE | 100" |

DTP ⊕ SYMBOL FOR DEEP TEST HOLES

PROPOSED STORMWATER AREA

P1 ⊖ SYMBOL FOR PERCOLATION TEST

PERCOLATION TEST RESULTS APRIL 20, 2023

| HOLE # | DROP MINUTE | DROP INCHES | SOIL RATE |
|---|---|---|---|
| P1 | 60 min. | 23 inch | 23 min/hr |
| | 60 min. | 22 inch | 22 min/hr |
| | 60 min. | 22 inch | 22 min/hr |

INFILTRATION TEST HOLE WERE EXCAVATED TO 58".
TEST RUNS WERE CONDUCTED FROM 34" TO 57" DEPTHS

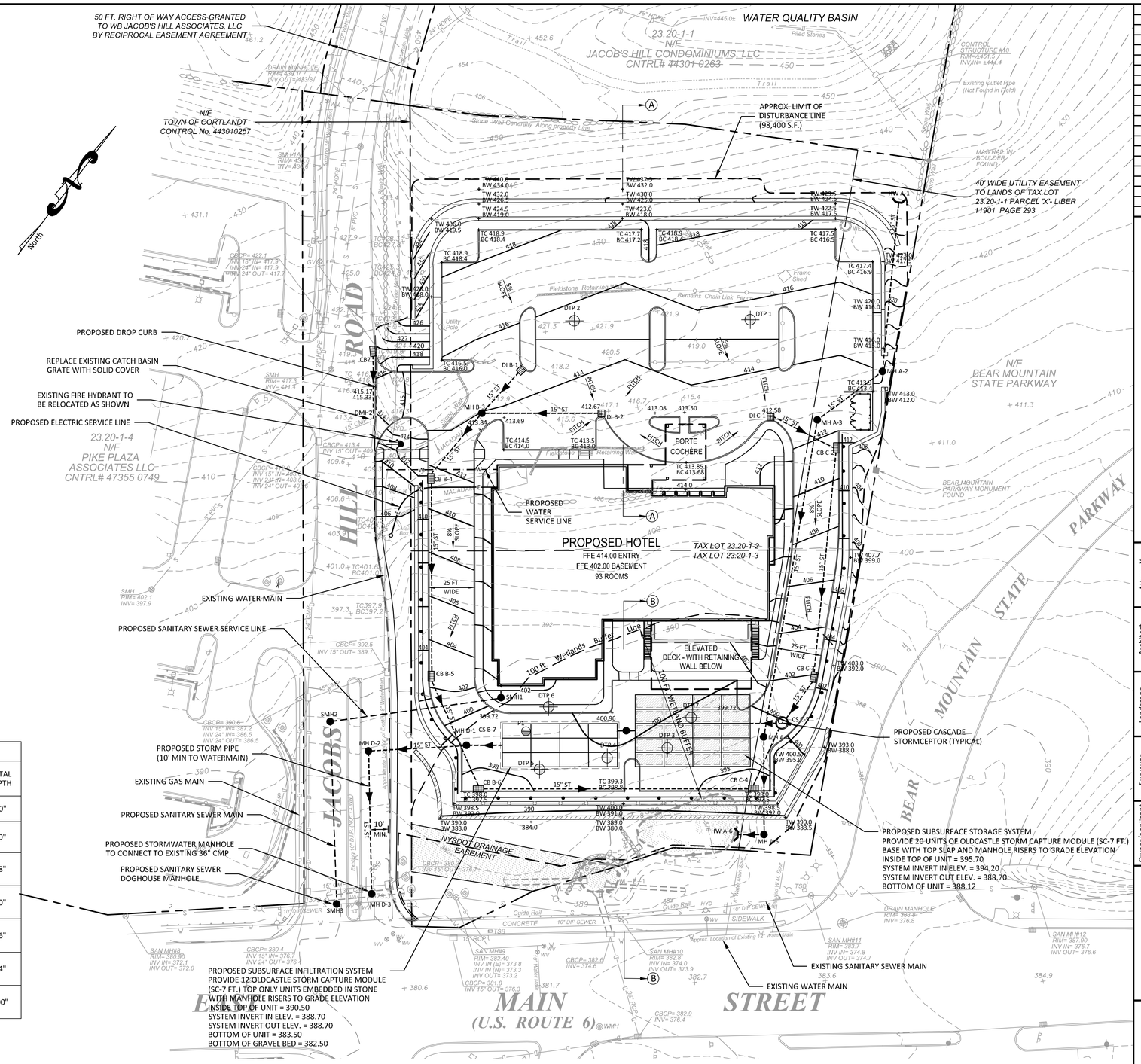


| NO. | REVISION | DATE |
|---|---|---|
| 1 | ISSUED TO PLANNING BOARD | 7/19/2023 |

GRADING & UTILITY PLAN LEGEND

- 410 PROPOSED CONTOUR LINE
- 410 EXISTING CONTOUR LINE
- + 410.5 PROPOSED SPOT ELEVATION
- PROPOSED MANHOLE
- PROPOSED CATCH BASIN (CB)
- CASCADE STORMCEPTOR
- SUBSURFACE INFILTRATION SYSTEM
- SUBSURFACE STORAGE SYSTEM
- DTP TEST PIT LOCATION & DESIGNATION
- ST PROPOSED STORM DRAIN
- PROPOSED RETAINING WALL
- SAN PROPOSED SEWER SERVICE
- W PROPOSED WATER SERVICE
- E PROPOSED ELECTRIC LINE
- Gas PROPOSED GAS LINE

30 20 10 0 30 60
SCALE IN FEET


Attorney: Zarin & Steinmetz, LLP, 81 Main Street, Suite 415, White Plains, NY 10601, Tel: 914-682-7800

Architect: Rod A. VanDerWater Architect, p.c., 7301 Barberry Lane, Manlius, NY 13104, Tel: 315-415-9988

Landscape Architect: Keplinger Freeman Associates, LLC, 6320 Fly Road, Suite 109, East Syracuse, NY 13057, Tel: 315-445-7980

Surveyor: Donald R. Stedge, P.L.S., 112 Murray Avenue, Goshen, NY 10924, Tel: 845-325-9734

Owner/Applicant: Bilal Ahmad, 116 Courtyard Drive, Oneonta, NY 13820, Tel: 315-219-2156

DTS · PROVIDENT Intelligent Land Use
DTS Provident Design Engineering, LLP
One North Broadway White Plains, NY 10601
P: 914.428.0010
F: 914.428.0017



Under New York State Education Law Article 145 (Engineering), Section 7209 (2), It Is A Violation Of This Law For Any Person, Unless Acting Under The Direction Of A Licensed Professional Engineer, To Alter This Document

© DTS Provident Design Engineering, LLP
Certificate Of Authorization #0017846


CORTLANDT MANOR HOTEL
2054 EAST MAIN STREET
TOWN OF CORTLANDT, NY
Section 23.20, Block: 1, Lots: 2 & 3

TITLE:
GRADING & UTILITY PLAN

Seal: STATE OF NEW YORK · PETER J. GREGORY · LICENSED PROFESSIONAL ENGINEER · No. 071226

| | |
|---|---|
| Scale: | 1" = 30' |
| Date: | 04/26/2023 |
| Drawn By: | KMM |
| Checked By: | PJG |
| Project No.: | 1021 |
| Sheet No.: | 4 of 12 |
| Dwg. No.: | C-201 |

Q:\PROJECTS-DTSP\1021 - Cortlandt Hotel\AutoCAD\SPA\C-201 Grading&UtilityPlan.dwg

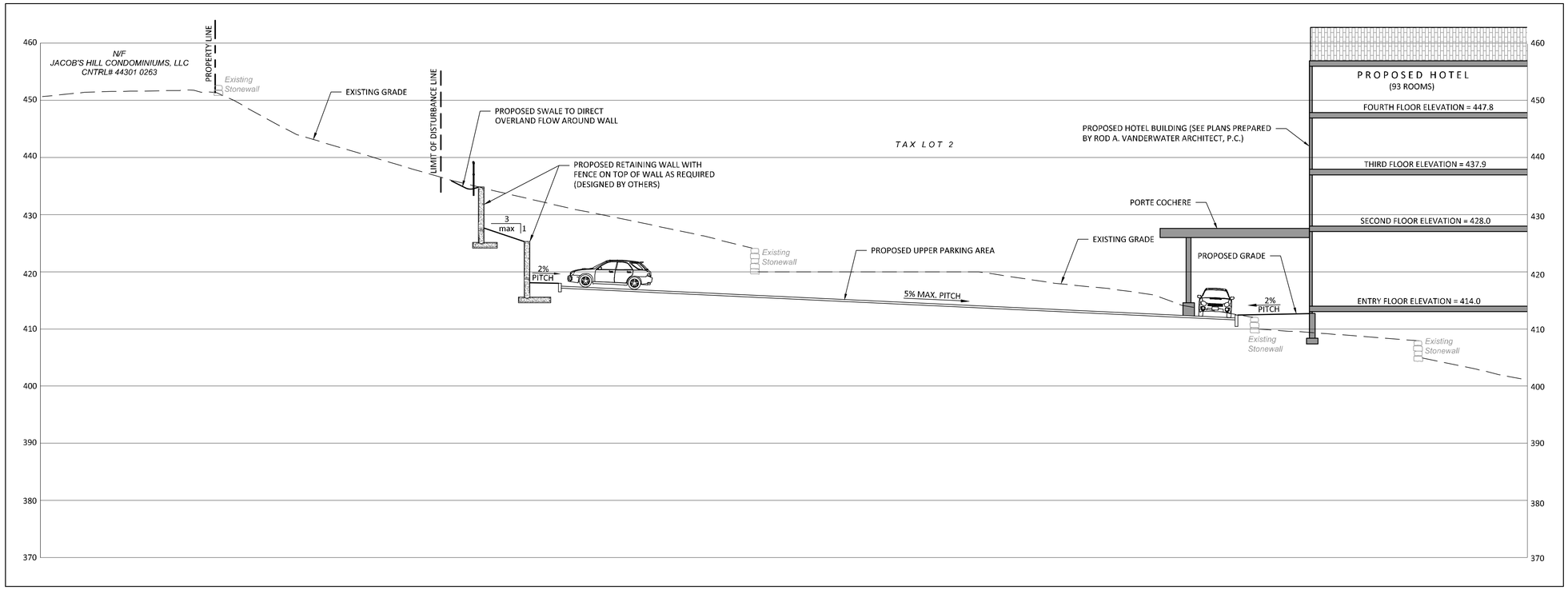


CROSS SECTION A - A

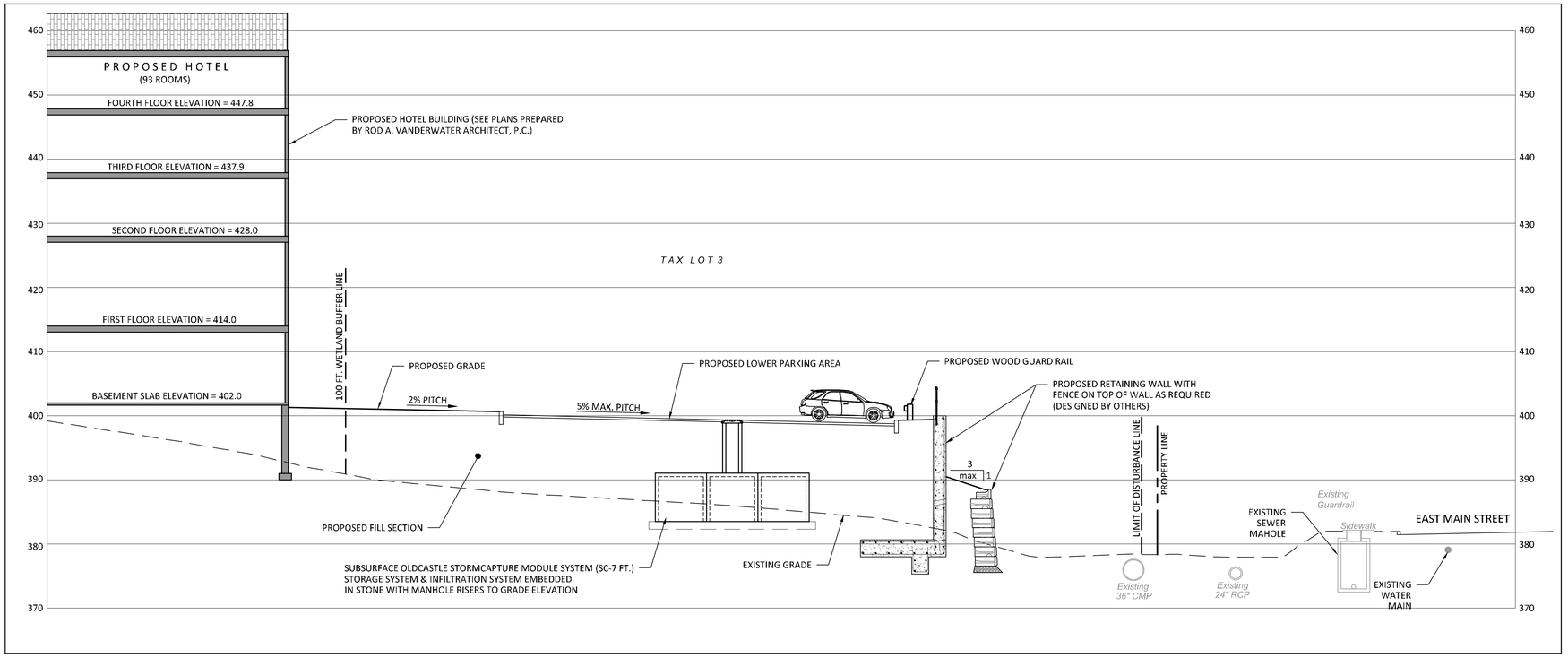


CROSS SECTION B - B

| NO. | REVISION | DATE |
|---|---|---|
| 1 | ISSUED TO PLANNING BOARD | 7/19/2023 |

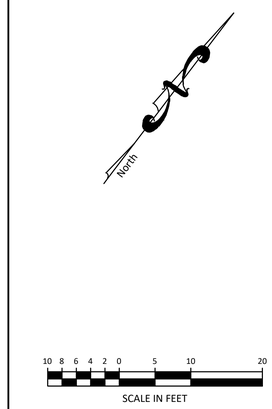



Attorney
Zarin & Steinmetz, LLP
81 Main Street, Suite 415
White Plains, NY 10601
Tel: 914-682-7800

Architect
Rod A. VanDerWater Architect, p.c.
7301 Barberry Lane
Manlius, NY 13104
Tel: 315-415-9988

Landscape Architect
Keplinger Freeman Associates, LLC
6320 Fly Road, Suite 109
East Syracuse, NY 13057
Tel: 315-445-7980

Surveyor
Donald R. Stedge, P.L.S.
112 Murray Avenue
Goshen, NY 10924
Tel: 845-325-9734

Owner/applicant
Bilal Ahmad
116 Courtyard Drive
Oneonta, NY 13820
Tel: 315-219-2156

DTS · PROVIDENT
Intelligent Land Use
DTS Provident Design Engineering, LLP
One North Broadway White Plains, NY 10601
P: 914.428.0010
F: 914.428.0017



Under New York State Education Law Article 145 (Engineering), Section 7209 (2), It Is A Violation Of This Law For Any Person, Unless Acting Under The Direction Of A Licensed Professional Engineer, To Alter This Document

© DTS Provident Design Engineering, LLP
Certificate Of Authorization #0017846


# CORTLANDT MANOR HOTEL

2054 EAST MAIN STREET
TOWN OF CORTLANDT, NY
Section 23.20, Block: 1, Lots: 2 & 3

TITLE:

## SECTIONS

Seal

STATE OF NEW YORK · PETER J. GREGORY · No. 071226 · LICENSED PROFESSIONAL ENGINEER

| | |
|---|---|
| Scale: | 1" = 10' |
| Date: | 04/26/2023 |
| Drawn By: | KMM |
| Checked By: | PJG |
| Project No.: | 1021 |
| Sheet No.: | 5 of 12 |
| Dwg. No.: | C-202 |

Q:\PROJECTS-DTSP\1021 - Cortlandt Hotel\AutoCAD\SPA\C-202 Sections.dwg

## SIGN LEGEND

| PLAN LEGEND | MUTCD | SIZE | SIGN LEGEND |
|---|---|---|---|
| 1 | R7-8X | 12" x 18" | RESERVED PARKING (SYMBOL) |
| 2 | R7-8P | 12" x 9" | VAN ACCESSIBLE |
| 3 | R1-1 | 12" x 18" | STOP |
| 4 | R7-1 | 12" x 18" | NO PARKING ANY TIME <---> |
| 5 | NA | 12" x 18" | ELECTRIC VEHICLE CHARGING |

NOTES:

1. ALL SIGNS SHALL CONFORM TO THE NATIONAL MANUAL ON UNIFORM TRAFFIC CONTROL DEVICES FOR STREETS AND HIGHWAYS AND THE NEW YORK STATE SUPPLEMENT, LATEST REVISION.
2. A MINIMUM OF TWO CROSS BRACES SHALL BE PROVIDED ON ALL SINGLE CHANNEL SIGNS HAVING ANY DIMENSION GREATER THAN 24 INCHES.
3. ALL SIGNS SHALL HAVE A MOUNTING HEIGHT OF 7'-0" TO THE BOTTOM OF THE SIGN.
4. ALL SIGNS SHALL UTILIZE A CHANNEL-TYPE MOUNTING.
5. ALL SIGNS SHALL BE REFLECTORIZED.
6. SIGNS NO. 6 & 7 SHALL HAVE A RED LEGEND WITH WHITE BACKGROUND.

## TOWN OF CORTLANDT

SCHEDULE OF PARKING REQUIREMENTS AS PER SECTION 301-29

| USE: | MINIMUM NUMBER OF SPACES |
|---|---|
| HOTEL | 1 PER ROOM PLUS<br>1 PER EMPLOYEE ON MAXIMUM SHIFT |

NUMBER OF PROPOSED ROOMS = 93
NUMBER OF EMPLOYEES ON MAXIMUM SHIFT = 7

REQUIRED NUMBER OF SPACES
93 SPACES + 7 SPACES

100 SPACES REQUIRED

NUMBER OF PROPOSED PARKING SPACES:
93 SPACES WITH 4 ACCESSIBLE SPACES*
*VARIANCE REQUIRED

TOTAL AREA OF PERIMETER OF PARKING AREA = 15,282 S.F.
5% OF TOTAL OF PARKING AREA = 765 S.F.

LANDSCAPE AREA PROVIDED AROUND PARKING AREA = 5,624 S.F.

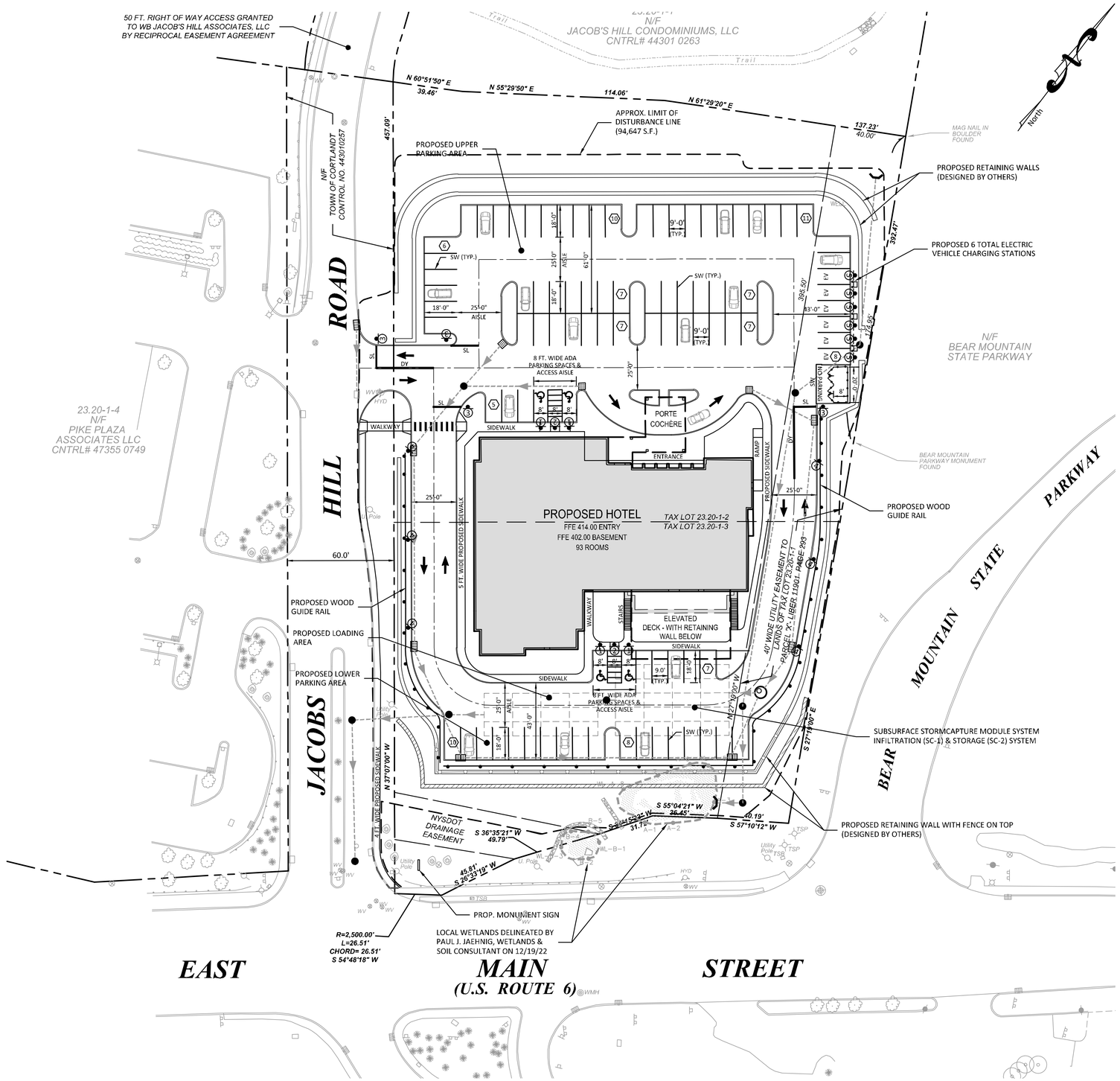


| NO. | REVISION | DATE |
|---|---|---|
| 1 | PLANNING BOARD REVIEW | 5/31/2023 |
| 2 | ISSUED TO PLANNING BOARD | 7/19/2023 |

## STRIPING & SIGN PLAN LEGEND

| | |
|---|---|
| SW | SOLID WHITE LINE, 4 " WIDE |
| SL | STOP LIMIT LINE, WHITE, 12 " WIDE |
| DY | DOUBLE YELLOW, 2 LINES, 4 " WIDE |
| (20) | NO. OF PARKING STALLS PER BAY LINE |
| (2) | PROPOSED TRAFFIC SIGN LOCATION AND DESIGNATION |
| | ADA PAVEMENT MARKING (BLUE) |
| | PAINTED DIRECTIONAL ARROW (WHITE) |
| EV | ELECTRIC VEHICLE CHARGING STATION (6 TOTAL) |

30 20 10 0 30 60
SCALE IN FEET


Attorney: Zarin & Steinmetz, LLP
81 Main Street, Suite 415
White Plains, NY 10601
Tel: 914-682-7800

Architect: Rod A. VanDerWater Architect, p.c.
7301 Barberry Lane
Manlius, NY 13104
Tel: 315-415-9988

Landscape Architect: Keplinger Freeman Associates, LLC
6320 Fly Road, Suite 109
East Syracuse, NY 13057
Tel: 315-445-7980

Surveyor: Donald R. Stedge, P.L.S.
112 Murray Avenue
Goshen, NY 10924
Tel: 845-325-9734

Owner/applicant: Bilal Ahmad
116 Courtyard Drive
Oneonta, NY 13820
Tel: 315-219-2156

DTS · PROVIDENT
Intelligent Land Use
DTS Provident Design Engineering, LLP
One North Broadway White Plains, NY 10601
P: 914.428.0010
F: 914.428.0017



Under New York State Education Law Article 145 (Engineering), Section 7209 (2), It Is A Violation Of This Law For Any Person, Unless Acting Under The Direction Of A Licensed Professional Engineer, To Alter This Document

© DTS Provident Design Engineering, LLP
Certificate Of Authorization #0017846


CORTLANDT MANOR HOTEL
2054 EAST MAIN STREET
TOWN OF CORTLANDT, NY
Section 23.20, Block: 1, Lots: 2 & 3

TITLE:
# STRIPING & SIGN PLAN

Seal: STATE OF NEW YORK · PETER J. GREGORY · No. 071226 · LICENSED PROFESSIONAL ENGINEER

| | |
|---|---|
| Scale: | 1"=30' |
| Date: | 04/26/2023 |
| Drawn By: | KMM |
| Checked By: | PJG |
| Project No.: | 1021 |
| Sheet No.: | 6 of 12 |
| Dwg. No.: | C-301 |

G:\PROJECTS-DTSP\1021 - Cortlandt Hotel\AutoCAD\SPA\C-301 StripingSignPlan.dwg

# TREE LIST

| Tag | Common Name | Latin Name | DBH | Cond. | Remove | Invasive Species | Map Code | Notes |
|---|---|---|---|---|---|---|---|---|
| 69 | Red maple | Acer rubrum | 24 | Fair | No | No | NA | None |
| 135 | Sugar maple | Acer saccharum | 7 | Fair | No | No | NA | None |
| 265 | Red Maple | Acer rubrum | 13 | Fair | No | No | NA | None |
| 421 | American linden | Tilia americana | 5 | Fair | Yes | No | 4" Sumac | None |
| 422 | Crabapple | Malus spp. | 18 | Critical | Yes | No | 22"Cherry | None |
| 423 | Norway maple | Acer platanoides | 22 | Fair | Yes | Yes | 22" Maple | None |
| 424 | Sugar maple | Acer saccharum | 6 | Fair | Yes | No | 6" Maple | None |
| 425 | Black locust | Robinia pseudoacaci | 6 | Fair | No | Yes | 6"Locust | None |
| 426 | Black locust | Robinia pseudoacaci | 5 | Fair | No | Yes | 5" Locust | None |
| 427 | Ash | Fraxinus spp. | 6 | Dead | Yes | No | 6" Twin Ash Dead | None |
| 428 | White oak | Quercus alba | 10 | Fair | Yes | No | 10" Oak | None |
| 429 | White oak | Quercus alba | 33 | Fair | Yes | No | 34" Pine | Old tag 1481 |
| 430 | Ailanthus | Ailanthus altissima | 5 | Fair | No | Yes | 5"Maple | None |
| 431 | Black locust | Robinia pseudoacaci | 7 | Fair | No | Yes | 6" Locust | None |
| 432 | Black locust | Robinia pseudoacaci | 13 | Poor | No | Yes | 12" Locust | None |
| 433 | Black walnut | Juglans nigra | 12&10 | Poor | No | No | 10&12"Ash | |
| 434 | Black locust | Robinia pseudoacaci | 5 | Poor | No | Yes | 5" Locust | None |
| 435 | Black locust | Robinia pseudoacaci | 4 | Poor | No | Yes | 4" Locust | None |
| 436 | Norway maple | Acer maple platanoides | 8 | Fair | No | Yes | 8" Maple | None |
| 437 | Oak stump | Quercus spp. | 52 | Dead | Yes | No | 48" Stump | None |
| 438 | Shagbark hickory | Carya ovata | 5 | Fair | No | No | 5" Locust | None |
| 439 | Red oak | Quercus rubra | 16 | Fair | No | No | 18" Oak | None |
| 440 | Sugar maple | Acer saccharum | 9 | Fair | No | No | 4 & 8" Maple | None |
| 441 | Black locust | Robinia pseudoacaci | 6 | Fair | No | Yes | 6" Locust | None |
| 442 | Canadian hemlock | Tsuga canadensis | 7 | Critical | No | No | 8" Birch | None |
| 443 | Black oak | Quercus velutina | 11 | Fair | Yes | No | 12" Oak | None |
| 444 | Canadian hemlock | Tsuga canadensis | 8 | Dead | Yes | No | 8" Birch | None |
| 445 | Black locust | Robinia pseudoacaci | 8 | Fair | Yes | Yes | 8"Locust | None |
| 446 | Canadian hemlock | Tsuga canadensis | 6 | Critical | Yes | No | 3 & 6" Hemlock | None |
| 447 | Canadian hemlock | Tsuga canadensis | 5&8 | Critical | Yes | No | 5 & 8" Hemlock | None |
| 448 | Canadian hemlock | Tsuga canadensis | 4&9 | Critical | Yes | No | 4&8"Hemlock or 6&9"Hemlock. Same trunk | None |
| 449 | Canadian hemlock | Tsuga canadensis | 4&6 | Dead | Yes | No | 4 & 6" Hemlock | None |
| 450 | Black locust | Robinia pseudoacaci | 8 | Fair | Yes | Yes | 8" Hemlock | None |
| 451 | Canadian hemlock | Tsuga canadensis | 8 | Dead | Yes | No | 8" Hemlock | None |
| 452 | Canadian hemlock | Tsuga canadensis | 4 & 5 & 5 | Critical | Yes | No | 4" | None |
| 453 | Canadian hemlock | Tsuga canadensis | 7&10 | Poor | Yes | No | 6 & 10" Hemlock | None |
| 454 | Canadian hemlock | Tsuga canadensis | 4 & 6 & 8 | Poor | Yes | No | 3" | None |
| 455 | Canadian hemlock | Tsuga canadensis | 4&9 | Poor | Yes | No | 5 & 8" Hemlock | None |
| 456 | Canadian hemlock | Tsuga canadensis | 8 | Poor | Yes | No | 8" Hemlock | None |
| 457 | Canadian hemlock | Tsuga canadensis | 7&6 | Poor | Yes | No | 6&8" Hemlock | None |
| 458 | Canadian hemlock | Tsuga canadensis | 3&4 | Poor | Yes | No | 3 & 4" Hemlock | None |
| 459 | Canadian hemlock | Tsuga canadensis | 9 & 5 & 4 | Poor | Yes | No | 4" | None |
| 460 | Canadian hemlock | Tsuga canadensis | 6 | Fair | Yes | No | 3 & 6" Hemlock | None |
| 461 | Ailanthus | Ailanthus altissima | 6 | Fair | Yes | Yes | 6"Sumac | None |
| 462 | Ailanthus | Ailanthus altissima | 5 | Fair | Yes | Yes | 5"Locust | None |
| 463 | Ailanthus | Ailanthus altissima | 9 | Fair | Yes | Yes | 9"Sumac | None |
| 464 | Canadian hemlock | Tsuga canadensis | 9 | Poor | Yes | No | 3 & 8" Hemlock | None |
| 465 | Canadian hemlock | Tsuga canadensis | 5&3&3 | Poor | Yes | No | 3" | None |
| 466 | Canadian hemlock | Tsuga canadensis | 9 | Poor | Yes | No | 9" Hemlock | None |
| 467 | Black walnut | Juglans nigra | 5 | Fair | Yes | No | 5" Sumac | None |
| 468 | Mulberry | Morus spp. | 13&12 | Poor | Yes | No | 10 & 12" Oak | None |
| 469 | Black walnut | Juglans nigra | 23 | Fair | Yes | No | 24" Oak | None |
| 470 | Ailanthus | Ailanthus altissima | 13 | Poor | Yes | Yes | 12"Locust | None |
| 471 | Black walnut | Juglans nigra | 5 | Poor | Yes | No | 6" Sumac | None |
| 472 | Black walnut | Juglans nigra | 4 | Poor | Yes | No | 4" Sumac | None |
| 473 | White pine | Pinus strobus | 20 | Good | Yes | No | 20" Pine | None |
| 474 | White pine | Pinus strobus | 17 | Fair | Yes | No | 18" Pine | None |
| 475 | Mulberry | Morus spp. | 6 | Fair | Yes | No | 6" Birch | None |
| 476 | Blue spruce | Picea pungens | 14 | Fair | Yes | No | 14"Spruce | None |
| 477 | Mulberry | Morus spp. | 6 | Fair | Yes | No | 6" Birch | None |
| 478a | Blue spruce | Picea pungens | 12 | Fair | Yes | No | 12" Spruce | None |
| 478b | White oak | Quercus alba | 16 | Fair | No | No | NA | None |
| 479 | Blue spruce | Picea pungens | 11 | Critical | Yes | No | 12" Spruce | None |
| 480 | Eastern cottonwood | Populus deltoides | 24 | Fair | No | No | 24" Birch | None |
| 481 | Hawthorn | Crataegus spp. | 6 | Good | No | No | 6" Cherry | None |
| 482 | Hawthorn | Crataegus spp. | 6 | Good | No | No | 6" Cherry | None |
| 483 | Hawthorn | Crataegus spp. | 6 | Fair | No | No | 6" Cherry | None |
| 484 | American elm | Ulmus americana | 10 | Fair | No | No | 10" Birch | None |
| 485 | Black locust | Robinia pseudoacacia | 6 | Poor | no | Yes | 6" Birch | None |
| 486 | White pine | Pinus strobus | 15 | Poor | Yes | No | 14" Pine | None |
| 487 | Boxelder | Acer negundo | 10 | Poor | No | No | 10" Locust | None |
| 488 | White pine | Pinus strobus | 10 | Poor | Yes | No | 3&10"Pine | None |
| 489 | Black locust | Robinia pseudoacacia | 6 | Poor | No | Yes | 6" Locust | None |
| 490a | Black locust | Robinia pseudoacacia | 9 | Poor | No | Yes | 8" Locust | None |
| 490b | Black Out | Quercus velutina | 19 | Good | No | No | NA | None |
| 491 | Black locust | Robinia pseudoacacia | 6 | Poor | No | Yes | 4" Locust Twin | Remove |
| 492 | Eastern cottonwood | Populus deltoides | 37 | Fair | No | No | 36" Oak | None |
| 493 | Black locust | Robinia pseudoacacia | 6 | Poor | No | Yes | 6"Locust | None |
| 494 | Red maple | Acer rubrum | 13 | Fair | No | No | 5 & 9" Maple | None |
| 495 | Red maple | Acer rubrum | 7 | Fair | No | No | 6" Maple | None |
| 496 | Red maple | Acer rubrum | 4 | Fair | No | No | 4" Maple | None |
| 497 | Black locust | Robinia pseudoacacia | 5 | Fair | Yes | Yes | 5"Locust | None |
| 498 | Red maple | Acer rubrum | 7 | Fair | Yes | No | 8" Maple | None |
| 499 | Red maple | Acer rubrum | 4 | Fair | Yes | No | 4" Maple | None |
| 500 | Black walnut | Juglans nigra | 8 | Poor | No | No | 8" Oak | None |
| 501 | White ash | Fraxinus americana | 8 | Critical | No | No | 8" Maple | None |
| 502 | Black walnut | Juglans nigra | 19 | Fair | No | No | 20" Maple | None |
| 503 | Red maple | Acer rubrum | 8 | Fair | Yes | No | 8"Maple | None |
| 504 | Red maple | Acer rubrum | 4 | Fair | Yes | No | 4"Birch | None |
| 505 | American elm | Ulmus americana | 10 | Fair | No | No | 10" Oak | None |
| 506 | American elm | Ulmus americana | 8 | Fair | No | No | 8"Oak | None |
| 507 | Sugar maple | Acer saccharum | 13 | Fair | No | No | 12" Maple | None |
| 508 | White ash | Fraxinus americana | 6 | Critical | No | No | 6" Maple | None |
| 509 | Sugar maple | Acer saccharum | 4 | Fair | No | No | 4" Maple | None |
| 510 | Black walnut | Juglans nigra | 17 | Fair | Yes | No | 18" Maple | None |
| 511 | Sugar maple | Acer saccharum | 5 | Dead | Yes | No | 4" Maple | None |
| 512 | Red maple | Acer rubrum | 9 | Poor | Yes | No | 8" Birch | None |
| 513 | Red maple | Acer rubrum | 6 | Fair | Yes | No | 5" Birch | None |
| 514 | Red maple | Acer rubrum | 5 | Fair | Yes | No | 5" Birch | None |
| 515 | Sugar maple | Acer saccharum | 10 | Good | Yes | No | 9" Maple | None |
| 516 | American elm | Ulmus americana | 5 | Fair | No | No | 5" Oak | None |
| 517 | Sugar maple | Acer saccharum | 6 | Fair | Yes | No | 5" Maple | None |
| 518 | Sugar maple | Acer saccharum | 11 | Fair | Yes | No | 12" Maple | None |
| 519 | Sugar maple | Acer saccharum | 11 | Fair | Yes | No | 12" Maple | None |
| 520 | Sugar maple | Acer saccharum | 6 | Fair | Yes | No | 6" Maple | None |
| 521 | Black walnut | Juglans nigra | 27 | Fair | Yes | No | 24" Maple | None |
| 522 | Sugar maple | Acer saccharum | 7 | Fair | Yes | No | 6" Maple | None |
| 523 | Red maple | Acer rubrum | 17 | Fair | Yes | No | 6 & 18" Maple | Old tag 2499 |
| 524 | White ash | Fraxinus americana | 11 | Critical | Yes | No | 11" Ash | Old tag 4087 |
| 525 | Sugar maple | Acer saccharum | 19 | Poor | Yes | No | 18" Maple | None |
| 526 | Sugar maple | Acer saccharum | 20 | Fair | Yes | No | 20" Maple | None |
| 527 | Sugar maple | Acer saccharum | 5 | Poor | Yes | No | 5" Maple | None |
| 528 | Sugar maple | Acer saccharum | 8 | Fair | Yes | No | 7" Maple | None |
| 529 | Sugar maple | Acer saccharum | 12 | Fair | Yes | No | 12" Maple | None |
| 530 | Sugar maple | Acer saccharum | 23 | Fair | Yes | No | 20" Maple | Old tag 4091 |
| 531 | Sugar maple | Acer saccharum | 4 | Fair | Yes | No | 4" Maple | None |
| 532 | Red maple | Acer rubrum | 14 | Dead | Yes | No | 14" Maple | Old tag 4092 |
| 533 | Sugar maple | Acer saccharum | 8 | Fair | Yes | No | 8" Maple | None |
| 534 | Sugar maple | Acer saccharum | 8 | Fair | Yes | No | 8" Maple | None |
| 535 | Sugar maple | Acer saccharum | 8 | Fair | Yes | No | 8" Maple | None |
| 536 | Sugar maple | Acer saccharum | 9 | Fair | Yes | No | 5 & 6" Maple | None |
| 537 | Sugar maple | Acer saccharum | 14 | Fair | Yes | No | 16" Maple | None |
| 538 | Sugar maple | Acer saccharum | 6&6 | Fair | Yes | No | 6 & 7" Maple | None |
| 539 | Sugar maple | Acer saccharum | 8 | Fair | Yes | No | 8" Maple | None |
| 540 | Sugar maple | Acer saccharum | 4 | Fair | Yes | No | 4" Maple | None |
| 541 | Sugar maple | Acer saccharum | 14&7 | Fair | Yes | No | 7 & 15" Maple | None |
| 542 | Sugar maple | Acer saccharum | 31 | Good | Yes | No | 32" Maple | None |
| 543 | Crabapple | Malus spp. | 20 | Poor | Yes | No | 22" Cherry | None |
| 544 | Black walnut | Juglans nigra | 22 | Fair | Yes | No | 24" Oak | None |
| 545 | Norway maple | Acer platanoides | 10 | Fair | Yes | Yes | 10" Maple | None |
| 546 | Mulberry | Morus spp. | 19&10 | Fair | Yes | No | 10 & 20" Cherry | None |
| 547 | Norway spruce | Picea abies | 50 | Poor | Yes | No | 24" Spruce | Old tag 2493 |
| 548 | Black oak | Quercus velutina | 4 | Fair | Yes | No | 4" Oak | None |
| 549 | Japanese maple | Acer palmatum | 8 & 6 & 4 | Poor | Yes | No | 5" | None |
| 550 | Pin oak | Quercus palustris | 4 | Good | Yes | No | 4"Oak | None |
| 551 | Japanese maple | Acer palmatum | 8 & 7 & 6 | Fair | Yes | No | Clump Japanese maple | None |
| 552 | Japanese maple | Acer palmatum | 18 & 10 | Poor | Yes | No | 5" | None |
| 553 | Ailanthus | Ailanthus altissima | 4 | Fair | Yes | Yes | 4" | None |
| 554 | Ailanthus | Ailanthus altissima | 6 | Fair | Yes | Yes | 6" Sumac | None |
| 555 | Japanese false cypress | Chamaecyparis pisifera | 8 & 6 | Fair | Yes | No | 4" | None |
| 556 | Japanese false cypress | Chamaecyparis pisifera | 21 & 18 | Critical | Yes | No | 8" | Old tag 1480 |
| 557 | Black walnut | Juglans nigra | 49 | Critical | Yes | No | 52" Oak | None |
| 558 | Norway spruce | Picea abies | 30 | Fair | Yes | No | 3" Spruce | Old tag 1477 |
| 559 | Black oak | Quercus velutina | 18 | Good | Yes | No | 20" Oak | None |
| 560 | Taxus | Taxus spp. | 12 | Fair | Yes | No | Evergreen clump | None |
| 561 | Taxus | Taxus spp. | 12 | Fair | Yes | No | Evergreen clump | None |
| 562 | White oak | Quercus alba | 36 | Critical | Yes | No | 30" Oak | Old tag 1483 |
| 563a | Black walnut | Juglans nigra | 14 | Fair | Yes | No | 14" Oak | None |
| 563b | Norway maple | Acer platanoides | 11 | Fair | No | Yes | NA | None |
| 564 | Black walnut | Juglans nigra | 9 | Fair | Yes | No | 10" Oak | None |
| 565 | Taxus | Taxus spp. | 12 | Fair | Yes | No | Evergreen clump | None |
| 566 | Flowering dogwood | Cornus florida | 6 | Fair | Yes | No | 3 & 6" Dogwood | None |
| 567 | White pine | Pinus strobus | 39 | Good | Yes | No | 36" Pine | Old tag 1484 |
| 568 | Red oak | Quercus rubra | 23 | Fair | Yes | No | 12&16" Oak | None |
| 569 | White pine | Pinus strobus | 30 | Dead | Yes | No | 30" PineDead | Old tag 2485 |
| 570 | Arborvitae | Thuja spp. | 5 | Fair | Yes | No | 2" | None |
| 571 | White pine | Pinus strobus | 30 | Good | Yes | No | 30" Pine | Old tag 2486 |
| 572 | Canadian hemlock | Tsuga canadensis | 28 | Fair | Yes | No | 28" Hemlock | Old tag 2487 |
| 573 | Canadian hemlock | Tsuga canadensis | 20 & 17 | Poor | Yes | No | 18" Twin Hemlock | Old tag 2488 |
| 574 | Sugar maple | Acer saccharum | 10 | Fair | Yes | No | 10" Maple | None |
| 575 | Crabapple | Malus spp. | 13 | Dead | Yes | No | 10&12" Cherry | None |
| 576 | Red oak | Quercus rubra | 9 | Fair | Yes | No | Not on map | None |
| 577 | Black walnut | Juglans nigra | 5 & 3 | Poor | Yes | No | 4&5" Locust | None |
| 688 | Norway maple | Acer platanoides | 21 | Fair | No | No | NA | None |
| 768 | Sugar maple | Acer saccharum | 14 | Fair | No | No | NA | None |
| 771 | Red oak | Acer rubrum | 19 | Dead | No | No | NA | None |
| 821 | Norway maple | Acer platanoides | 7 | Poor | No | Yes | NA | None |

| SLOPE AREA CHART | | | |
|---|---|---|---|
| SLOPE CLASS MIN. | SLOPE CLASS MAX. | AREA (s.f.) | COLOR |
| 25% | 100% | 23,063 | |

| DISTURBANCE CHART | | |
|---|---|---|
| HATCH | CATEGORY | DIST. AREA |
| | >25% SLOPE | 14,190 SF |

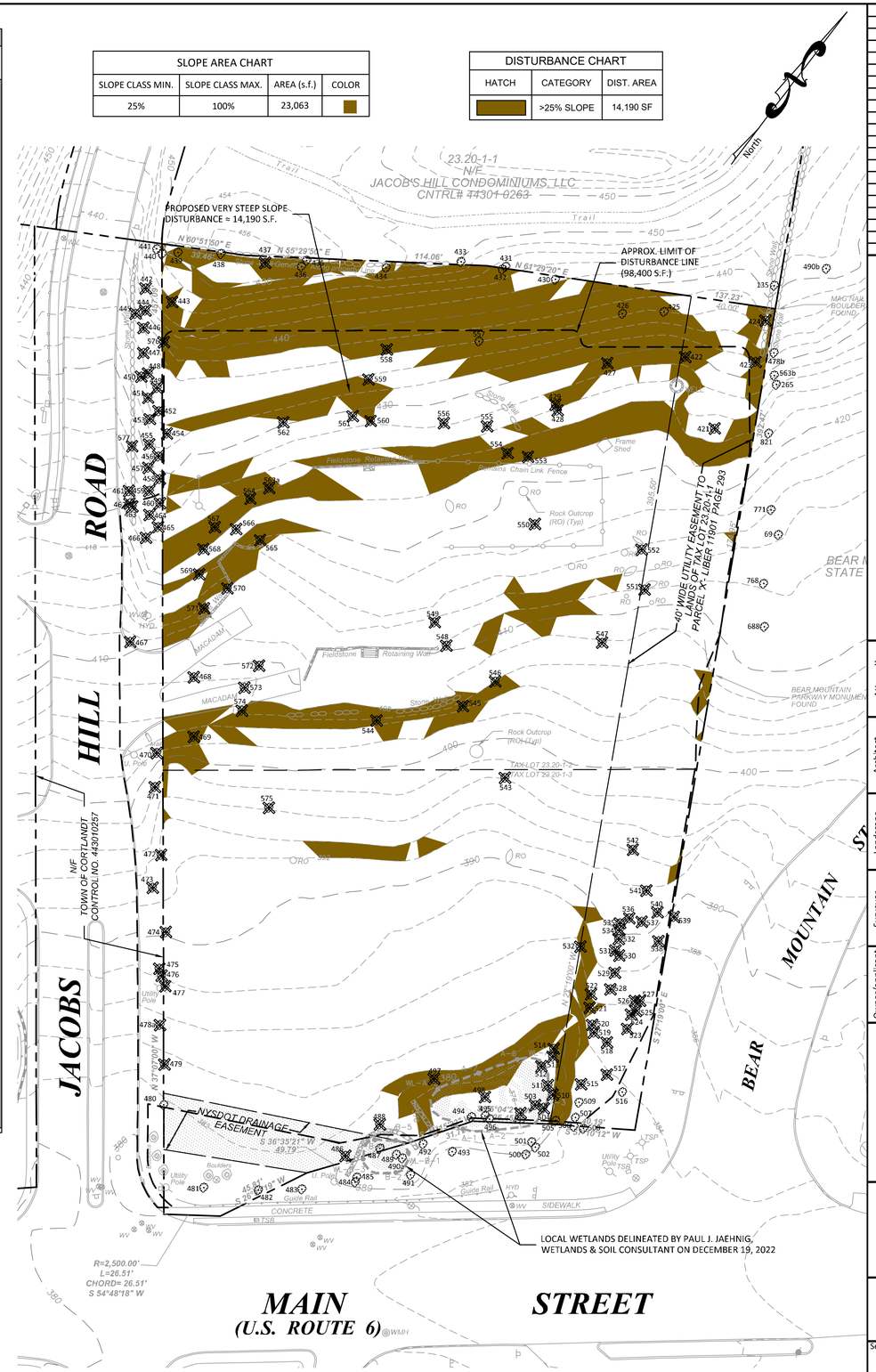


| TREE REPLACEMENT |
|---|
| NO TREES FROM APPENDIX A, LIST OF PROTECTED TREES WERE IDENTIFIED |
| TOTAL NUMBER OF TREES = 167 |
| TOTAL NUMBER OF TREES TO BE REMOVED = 119 |
| TOTAL AREA OF DISTURBANCE ASSOCIATED WITH PROJECT = 98,400 S.F. (2.25 ACRES) |
| TOTAL AREA OF DISTURBANCE TO SLOPES 25% OR GREATER = 14,190 S.F. |
| TOTAL NUMBER OF TREES TO BE REMOVED WITHIN SLOPES 25% OR GREATER = 27 |
| REPLACEMENT VALUE OF 1 TREE PER 1,000 S.F. OF OVERALL SITE DISTURBANCE<br>- 98,400 S.F. DISTURBANCE / 1,000 S.F. PER TREE = 98 TREES |
| REPLACEMENT VALUE OF TREES REMOVED ON SLOPES OF 25% OR GREATER REQUIRES 2:1 REPLACEMENT<br>- -27 TREES TO BE REMOVED ON SLOPES OF 25% OR GREATER 27 x 2 = 54 TREES |
| TOTAL NUMBER OF TREES REQUIRED TO BE PROVIDED = 148 TREES |

| NO. | REVISION | DATE |
|---|---|---|
| 1 | ISSUED TO PLANNING BOARD | 7/19/2023 |

## TREE PLAN LEGEND

- PROPERTY LINE
- LIMITS OF DISTURBANCE
- 400 — EXISTING CONTOUR LINE
- 8" maple 72 — EXISTING TREE W/ SIZE & NUMBER
- TREE TO BE PROTECTED
- TREE TO BE REMOVED

30 20 10 0 30 60
SCALE IN FEET


Attorney: Zarin & Steinmetz, LLP
81 Main Street, Suite 415
White Plains, NY 10601
Tel: 914-682-7800

Architect: Rod A. VanDerWater Architect, p.c.
7301 Barberry Lane
Manlius, NY 13104
Tel: 315-415-9988

Landscape Architect: Keplinger Freeman Associates, LLC
6320 Fly Road, Suite 109
East Syracuse, NY 13057
Tel: 315-445-7980

Surveyor: Donald R. Stedge, P.L.S.
112 Murray Avenue
Goshen, NY 10924
Tel: 845-325-9734

Owner/applicant: Bilal Ahmad
116 Courtyard Drive
Oneonta, NY 13820
Tel: 315-219-2156

DTS · PROVIDENT
Intelligent Land Use
DTS Provident Design Engineering, LLP
One North Broadway White Plains, NY 10601
P: 914.428.0010
F: 914.428.0017



Under New York State Education Law Article 145 (Engineering), Section 7209 (2), It Is A Violation Of This Law For Any Person, Unless Acting Under The Direction Of A Licensed Professional Engineer, To Alter This Document

© DTS Provident Design Engineering, LLP
Certificate Of Authorization #0017846


CORTLANDT MANOR HOTEL
2054 EAST MAIN STREET
TOWN OF CORTLANDT, NY
Section 23.20, Block: 1, Lots: 2 & 3

TITLE: TREE PLAN

Seal: STATE OF NEW YORK · PETER J. GREGORY · LICENSED PROFESSIONAL ENGINEER · No. 071225

| | |
|---|---|
| Scale: | 1" = 30' |
| Date: | 04/26/2023 |
| Drawn By: | KMM |
| Checked By: | PJG |
| Project No.: | 1021 |
| Sheet No.: | 7 of 12 |
| Dwg. No.: | C-401 |

Q:\PROJECTS-DTSP\1021 - Cortlandt Hotel\AutoCAD\SPA\C-401 Tree Plan.dwg

NEW YORK SOIL EROSION AND SEDIMENT CONTROL NOTES

1. SOIL EROSION AND SEDIMENT CONTROL (E&SC) MEASURES/PRACTICES SHALL BE INSTALLED IN ACCORDANCE WITH NEW YORK STANDARDS AND SPECIFICATIONS FOR EROSION AND SEDIMENT CONTROL (BLUE BOOK), LATEST REVISION, AND PART I.8 OF THE NYSDEC SPDES GENERAL PERMIT FOR STORMWATER DISCHARGES FROM CONSTRUCTION ACTIVITY, PERMIT NO. GP-0-20-001.

2. THE OWNER/OPERATOR, CONSTRUCTION MANAGER, CONTRACTOR, AND/OR OTHER REPRESENTATIVE MUST NOTIFY THE DESIGNATED MS4 OFFICIAL AT LEAST 48 HOURS IN ADVANCE OF THE COMMENCEMENT OF ANY LAND DISTURBANCE ACTIVITY, SO THAT INSPECTIONS CAN BE SCHEDULED.

3. E&SC MEASURES/PRACTICES, AS COORDINATED WITH THE PHASING/TIMING OF PROJECT CONSTRUCTION, SHALL BE INSTALLED/IMPLEMENTED IN ACCORDANCE WITH THE CONSTRUCTION SEQUENCE NOTES ON THE DRAWINGS AND/OR AS SPECIFIED IN THE SWPPP. E&SC DEVICES/PRACTICES SHALL BE INSTALLED BY THE CONTRACTOR AFTER VEGETATIVE CLEARING OPERATIONS AND PRIOR TO ANY GRADING OR OTHER MAJOR SOIL DISTURBANCE.

4. THE CONTRACTOR SHALL CONFINE SOIL DISTURBANCE ACTIVITIES TO THE AREAS CONTAINED WITHIN THE LIMITS OF CONSTRUCTION WORKSPACE/LIMITS OF PROJECT DISTURBANCE SHOWN ON THE PLANS. SUCH ACTIVITY SHALL GENERALLY CONSIST OF, BUT NOT BE LIMITED TO: CLEARING; GRUBBING; ROW AND TEMPORARY CONSTRUCTION WORKSPACE DEMOLITION, EARTHWORK AND GRADING; UTILITY TRENCH EXCAVATION; BACKFILLING; HYDROSTATIC TESTING; AND SITE RESTORATION AND STABILIZATION.

5. THE TRAINED CONTRACTOR (AS DEFINED IN GP-0-20-001) SHALL INSPECT THE E&SC DEVICES/PRACTICES AND POLLUTION PREVENTION MEASURES BEING IMPLEMENTED WITHIN ALL WORK AREAS (ACTIVE AND INACTIVE) **DAILY** UNTIL EITHER TEMPORARY OR PERMANENT STABILIZATION HAS BEEN ACHIEVED, TO ENSURE THAT THEY ARE BEING MAINTAINED IN AN EFFECTIVE OPERATING CONDITION AT ALL TIMES.

6. THE CONTRACTOR SHALL REPAIR OR REPLACE DAMAGED E&SC DEVICES/MEASURES **WITHIN TWENTY-FOUR (24) HOURS** AFTER OBSERVING SUCH DEFICIENCIES, OR AFTER SUCH DEFICIENCIES ARE REPORTED BY THE INSPECTOR(S), NYCDEP AND/OR DESIGNATED MS4 OFFICIAL.

7. THE CONTRACTOR SHALL BE PREPARED, IN ACCORDANCE WITH NOTE NO. 10 BELOW, TO IMPLEMENT ADDITIONAL AND/OR INTERIM DRAINAGE CONTROLS AND E&SC MEASURES/PRACTICES AS MAY BE NECESSARY DURING THE COURSE OF CONSTRUCTION.

8. THE CONTRACTOR SHALL MAKE AVAILABLE ONSITE ALL EQUIPMENT, MATERIALS AND LABOR NECESSARY TO EFFECT EMERGENCY E&SC AND DRAINAGE IMPROVEMENTS WITHIN TWENTY-FOUR (24) HOURS OF ANY IMPENDING EMERGENCY SITUATION.

9. SOIL E&SC MEASURES/PRACTICES SHALL BE MAINTAINED BY THE CONTRACTOR UNTIL FINAL ACCEPTANCE OF THE SITE WORK BY THE ENVIRONMENTAL INSPECTOR(S) AND/OR NYCDEP. UPON CERTIFICATION OF FINAL ACCEPTANCE, THE OWNER/OPERATOR SHALL ASSUME RESPONSIBILITY FOR THE CONTINUED MAINTENANCE OF PERMANENTLY RESTORED AREAS.

10. THE ENVIRONMENTAL/E&SC INSPECTOR(S), NYCDEP, AND/OR DESIGNATED MS4 OFFICIAL MAY REQUEST THE INSTALLATION OF ADDITIONAL MEASURES TO MINIMIZE THE POTENTIAL FOR ONSITE OR OFFSITE EROSION AND/OR SEDIMENTATION CONDITIONS OCCURING DURING CONSTRUCTION.

11. **TEMPORARY SOIL STABILIZATION** - IN AREAS WHERE SOIL DISTURBANCE ACTIVITY HAS TEMPORARILY CEASED AND IS NOT SUBJECT TO CONSTRUCTION TRAFFIC, APPLICATION OF THE BELOW MEASURES MUST BE INITIATED BY THE END OF THE NEXT BUSINESS DAY AND COMPLETED **WITHIN SEVEN (7) DAYS** FROM THE DATE THE SOIL DISTURBANCE ACTIVITY CEASED. THE MEASURES SHALL BE DONE IN ACCORDANCE WITH THE BLUE BOOK, AS FOLLOWS:
    a. FERTILIZER: FERTILIZER OR LIME WILL NOT BE USED.
    b. SEED: ANNUAL RYE, WHICH SHALL INCLUDE EITHER ANNUAL RYEGRASS (LOLIUM PERENNE SSP. MULTIFLORUM) APPLIED AT THE RATE OF 30 LBS./ACRE, OR WINTER RYE.
    c. MULCH: SMALL GRAIN STRAW MULCH APPLIED AT A RATE OF 90-LBS/1000 S.F. OR 2 TONS/ACRE, OR EQUIVALENT, TO BE APPLIED AND ANCHORED ACCORDING TO THE NYS STANDARDS OR AS SPECIFIED ON THE DRAWINGS.
    d. PAVED AREAS: ARE CONSIDERED STABILIZED AFTER PLACEMENT AND COMPACTION OF PAVEMENT SUBBASE/BEDDING MATERIAL.
    e. STEEP SLOPES: IN ACCORDANCE WITH NOTE NO. 14 BELOW.

12. **WINTER STABILIZATION** - IF WEATHER OR OTHER CONDITIONS **AFTER OCTOBER 15** CAUSE INTERRUPTION OF CONSTRUCTION OR RESTORATION ACTIVITY AND PREVENT THE ESTABLISHMENT OF TEMPORARY COVER/STABILIZATION PER NOTE N0. 11 ABOVE, ONE OF THE FOLLOWING MEASURES SHALL BE IMPLEMENTED UNTIL TEMPORARY VEGETATIVE OR FINAL RESTORATION MEASURES CAN BE COMPLETED:
    a. SEED WITH 1.67 BUSHELS PER ACRE (100 LBS/ACRE) OF CERTIFIED 'AROOSTOOK' WINTER RYE (CEREAL RYE). MULCH THE ROW AT 3.0 TONS PER ACRE WITH WHEAT STRAW.
    b. APPLICATION OF HYDROMULCH/SOIL STABILIZERS - SHALL BE CLASS IV, TYPE A - BONDED FIBER MATRIX (BFM) OR TYPE C - FLEXIBLE GROWTH MEDIUM (FGM) AS SPECIFIED IN SECTION 713-07 OF THE NEW YORK STATE DEPARTMENT OF TRANSPORTATION (NYSDOT) STANDARD SPECIFICATIONS

13. **PERMANENT SOIL STABILIZATION** - IN AREAS WHERE SOIL DISTURBANCE ACTIVITY HAS PERMANENTLY CEASED AND IS NOT SUBJECT TO FURTHER DISTURBANCE OR CONSTRUCTION TRAFFIC, THE APPLICATION OF SOIL STABILIZATION MEASURES MUST BE INITIATED BY THE END OF THE NEXT BUSINESS DAY AND COMPLETED **WITHIN SEVEN (7) DAYS** FROM THE DATE OF FINAL GRADING (INCLUDING SPREADING OF STOCKPILED TOPSOIL). FINAL STABILIZATION MEASURES SHALL BE APPLIED AS FOLLOWS:
    a. COMPOST AND ADD SOIL PH MODIFIERS: COMPOST AND PH MODIFIERS WILL BE APPLIED IN ACCORDANCE WITH THE SOIL RESTORATION SPECIFICATIONS IN THE BLUE BOOK OR AS INDICATED ON THE DRAWINGS, AND IN ACCORDANCE WITH SECTION 2.5 OF THE SWPPP.
    b. SEED MIXTURE AND MULCH: PERMANENT STEEP SLOPES SEED MIX AS SPECIFIED ON THE PROJECT LANDSCAPE/PLANTING PLAN (BY OTHERS), TO BE PLANTED BETWEEN MARCH 15 AND MAY 15, OR BETWEEN AUGUST 15 AND OCTOBER 15 (PREFERRED). MULCH SHALL BE SMALL GRAIN STRAW AT A RATE OF 90-LBS/1000 S.F. OR 2 TONS/ACRE, TO BE APPLIED AND ANCHORED ACCORDING TO THE MULCH STANDARDS AND SPECIFICATIONS IN THE BLUE BOOK.
    c. TREES, SHRUBS, AND PLANTS WITH MULCH: TO BE PLANTED AS SPECIFIED AND DETAILED ON THE PROJECT LANDSCAPE/PLANTING PLAN (BY OTHERS). MULCH SHALL BE SHREDDED CEDAR BARK AS APPROVED BY THE LANDSCAPE ARCHITECT, SPREAD AT A THICKNESS OF 2 OR 3 INCHES WHERE SPECIFIED ON THE PROJECT LANDSCAPE/PLANTING PLAN.
    d. UNTIL PERMANENT STABILIZATION IS ACHIEVED (I.E. MINIMUM 80% DENSITY OF VEGETATIVE AND/OR HARDSCAPE COVER), CONSTRUCTION WORK AREAS WILL BE SUBJECT TO A CONTINUED INSPECTION AND MAINTENANCE PROGRAM AS SPECIFIED IN THE DRAWINGS AND/OR SWPPP. FOR AREAS WHERE ESTABLISHMENT OF VEGETATION IS UNSUCCESSFUL IN THE FIRST GROWING SEASON AFTER SEEDING, PH AND ORGANIC MATTER LEVELS SHALL BE CHECKED USING LAB ANALYSIS TO DETERMINE IF ADDITIONAL MODIFIERS ARE NEEDED RPIOR TO RESEEDING.

14. CUT OR FILL SLOPES STEEPER THAN 3 HORIZONTAL TO 1 VERTICAL (3H:1V), AND AREAS OF SOILS WITH SEVERE EROSION POTENTIAL WHERE INDICATED ON THE PLANS SHALL BE STABILIZED IMMEDIATELY AFTER GRADING, AND AFTER COMPLETION OF DAILY CONSTRUCTION ACTIVITIES AS DIRECTED BY THE ENVIRONMENTAL/E&SC INSPECTOR(S), WITH A TEMPORARY COVER OF STRAW MULCH OR EQUIVALENT AT A RATE OF 3 TONS/ACRE (SEE THE MULCH STANDARDS AND SPECIFICATIONS IN THE BLUE BOOK) OR WITH EROSION CONTROL MATTING (BLANKETS).

15. PAVED ROADWAYS SHALL BE KEPT CLEAN AT ALL TIMES USING MANUAL AND/OR MECHANICAL SWEEPING MEASURES.

16. CATCH BASINS/DRAIN INLETS AS SHOWN ON THE PLANS, OR AT OTHER LOCATIONS AS DIRECTED BY THE ENVIRONMENTAL/E&SC INSPECTOR, MUST BE PROTECTED ACCORDING TO THE METHODS SHOWN ON THE E&SC DETAIL SHEETS OR IN THE BLUE BOOK PRIOR TO THE START OF CONSTRUCTION. STORM DRAINAGE OUTLETS SHALL BE STABILIZED, AS REQUIRED, BEFORE THE DISCHARGE POINTS BECOME OPERATIONAL.

17. CONSTRUCTION FENCING SHALL BE USED TO PROTECT EXISTING TREES TO REMAIN, AND OTHER SENSITIVE AREAS (WITH SILT FENCE WHERE APPLICABLE) WHERE SPECIFIED THAT ARE NOT TO BE DISTURBED.

18. STORM WATER RUNOFF FROM DISTURBED AREAS AND DISCHARGES FROM ALL DEWATERING AND HYDROSTATIC TESTING OPERATIONS MUST PASS THROUGH A SEDIMENT FILTER DEVICE OR PRACTICE AS DETAILED ON THE DRAWINGS OR AS APPROVED BY THE ENGINEER, ENVIRONMENTAL/E&SC INSPECTOR, AND/OR NYCDEP BEFORE BEING DISCHARGED BEYOND DISTURBED AREAS, OR DISCHARGED INTO INLETS, WATERBODIES, OR OTHER DRAINAGE SYSTEMS. THE FILTERING DEVICE/PRACTICE SHALL BE LOCATED WHERE SHOWN ON THE PLANS; IN FLAT, UPLAND AREAS WHERE VEGETATION IS PRESENT (IF POSSIBLE).

19. DUST CONTROL - WATER SHALL BE APPLIED BY SPRINKLER OR WATER TRUCK DURING EARTHWORK AND GRADING OPERATIONS TO MINIMIZE SEDIMENT TRANSPORT AND MAINTAIN ACCEPTABLE AIR QUALITY CONDITIONS. REPETITIVE TREATMENTS SHALL BE DONE AS NEEDED UNTIL GRADES ARE STABILIZED.

SOIL RESTORATION STANDARDS

THE OBJECTIVE IS TO DE-COMPACT THE SOILS IN THOSE AREAS WHICH WERE SUBJECT TO THE USE OF HEAVY EQUIPMENT AND TO RESTORE THE ORIGINAL PROPERTIES OF THE SOIL BY TILLING (OR ROTOTILLING) AND SOIL AMENDMENT THROUGH THE USE OF COMPOST. THIS WILL REDUCE THE GENERATION OF RUNOFF DUE TO CONSTRUCTION ACTIVITIES AND ENHANCE THE RUNOFF REDUCTION CAPACITY OF THE SOILS.

SOIL RESTORATION WILL BE APPLIED DURING THE CLEANUP AND RESTORATION PHASE OF THE PROJECT. ALL DISTURBED AND COMPACTED AREAS THAT WILL BE UNPAVED, VEGETATED AND/OR LANDSCAPED IN THE POST-CONSTRUCTION CONDITION WILL BE RESTORED IN ACCORDANCE WITH THE SOIL RESTORATION REQUIREMENTS IN TABLE 4.6 ON THIS DRAWING. SOIL RESTORATION WILL BE ACCOMPLISHED DURING PERIODS OF RELATIVELY LOW TO MODERATE SUBSOIL MOISTURE, THE DISTURBED SUBSOILS WILL BE RETURNED TO ROUGH GRADE AND THE FOLLOWING STEPS WILL BE IMPLEMENTED:

1. THREE (3) INCHES OF COMPOST WILL BE APPLIED OVER THE SUBSOIL. THE COMPOST SHALL BE WELL DECOMPOSED (MATURED AT LEAST 3 MONTHS), WEED-FREE, ORGANIC MATTER. IT SHALL BE AEROBICALLY COMPOSTED, POSSESS NO OBJECTIONABLE ODORS, AND CONTAIN LESS THAN 1%, BY DRY WEIGHT, OF MAIN-MADE FOREIGN MATTER. PHYSICAL PARAMETERS SHALL MEET THE STANDARDS LISTED IN TABLE 5.2 OF THE NEW YORK STATE STANDARDS AND SPECIFICATIONS FOR EROSION AND SEDIMENT CONTROL, LATEST EDITION, EXCEPT FOR PARTICLE SIZE WITH 100% PASSING THE 1/2 -INCH SIEVE.

2. THE COMPOST LAYER WILL BE TILLED INTO THE SUBSOIL TO A DEPTH OF AT LEAST 12 INCHES USING A CAT-MOUNTED RIPPER, TRACTOR-MOUNTED DISC, OR TILLER, MIXING, AND CIRCULATING AIR AND COMPOST INTO SUBSOILS. TILLING SHOULD NOT BE PERFORMED WITHIN THE DRIP LINE OF ANY EXISTING TREES OR OVER UTILITY INSTALLATIONS THAT ARE WITHIN 24 INCHES OF THE SURFACE. THE USE OF FERTILIZERS WILL BE MINIMIZED AND UTILIZED ONLY WITHIN COMMERCIAL LAWN AREAS, AND SHALL BE APPLIED IN ACCORDANCE WITH WESTCHESTER COUNTY LAW (SEE ALSO DRAWING C-2).

3. ROCK-PICKING WILL BE PERFORMED UNTIL UPLIFTED STONE/ROCK MATERIALS OF FOUR INCHES AND LARGER SIZE HAVE BEEN CLEARED.

4. TOPSOIL WILL BE APPLIED TO A MINIMUM DEPTH OF 6 INCHES. TOPSOIL SHALL BE PROVIDED FROM STOCKPILES CREATED DURING TOPSOIL SEGREGATION OPERATIONS, OR IMPORTED FROM OFFSITE SOURCES AS REQUIRED.

5. VEGETATE AREAS AS SPECIFIED AND DETAILED ON THE PROJECT LANDSCAPE/PLANTING PLAN. USE APPROPRIATE GROUND COVER WITH DEEP ROOTS TO MAINTAIN THE SOIL STRUCTURE.

6. UPON COMPLETION, THE ENVIRONMENTAL INSPECTOR SHOULD BE ABLE TO PUSH A 3/8 INCH METAL BAR 12 INCHES INTO THE SOIL JUST WITH BODY WEIGHT.

TABLE 4.6

| SOIL RESTORATION REQUIREMENTS | | | |
|---|---|---|---|
| TYPE OF SOIL DISTURBANCE | SOIL RESTORATION REQUIREMENT | | COMMENTS/EXAMPLES |
| NO SOIL DISTURBANCE | RESTORATION NOT PERMITTED | | PRESERVATION OF NATURAL FEATURES |
| MINIMAL SOIL DISTURBANCE | RESTORATION NOT REQUIRED | | CLEARING AND GRUBBING |
| AREAS WHERE TOPSOIL IS STRIPPED ONLY - NO CHANGE IN GRADE | HSG A&B | HSG C&D | PROTECT AREA FROM ANY ONGOING CONSTRUCTION ACTIVITIES. |
| | APPLY 6 INCHES OF TOPSOIL | AERATE* AND APPLY 6 INCHES OF TOPSOIL | |
| AREAS OF CUT OR FILL | HSG A&B | HSG C&D | |
| | AERATE* AND APPLY 6 INCHES OF TOPSOIL | APPLY FULL SOIL RESTORATION** | |
| HEAVY TRAFFIC AREAS ON SITE (ESPECIALLY IN A ZONE 5-25 FEET AROUND BUILDINGS BUT NOT WITHIN A 5 FOOT PERIMETER AROUND FOUNDATION WALLS) | APPLY FULL SOIL RESTORATION (DECOMPACTION AND COMPOST ENHANCEMENT) | | |
| AREAS WHERE RUNOFF REDUCTION AND/OR INFILTRATION PRACTICES ARE APPLIED | RESTORATION NOT REQUIRED BUT MAY BE APPLIED TO ENHANCE THE REDUCTION SPECIFIED FOR APPROPRIATE PRACTICES. | | KEEP CONSTRUCTION EQUIPMENT FROM CROSSING THESE AREAS. TO PROTECT NEWLY INSTALLED PRACTICE FROM ANY ONGOING CONSTRUCTION ACTIVITIES CONSTRUCT A SINGLE-PHASE OPERATION FENCE AREA |
| REDEVELOPMENT PROJECTS | SOIL RESTORATION IS REQUIRED ON REDEVELOPMENT PROJECTS IN AREAS WHERE EXISTING IMPERVIOUS AREA WILL BE CONVERTED TO PERVIOUS AREA. | | |
| * AERATION INCLUDES THE USE OF MACHINES SUCH AS TRACTOR-DRAWN IMPLEMENTS WITH COULTERS MAKING A NARROW SLIT IN THE SOIL, A ROLLER WITH MANY SPIKES MAKING INDENTATIONS IN THE SOIL, OR PRONGS WHICH FUNCTION LIKE A MINI-SUBSOILER | | | |
| ** PER "DEEP RIPPING AND DECOMPACTION, DEC 2008" | | | |
| HSG – HYDROLOGIC SOIL GROUP | | | |
| SOURCE: NEW YORK STATE STANDARDS AND SPECIFICATIONS FOR EROSION AND SEDIMENT CONTROL NOVEMBER 2016 | | | |

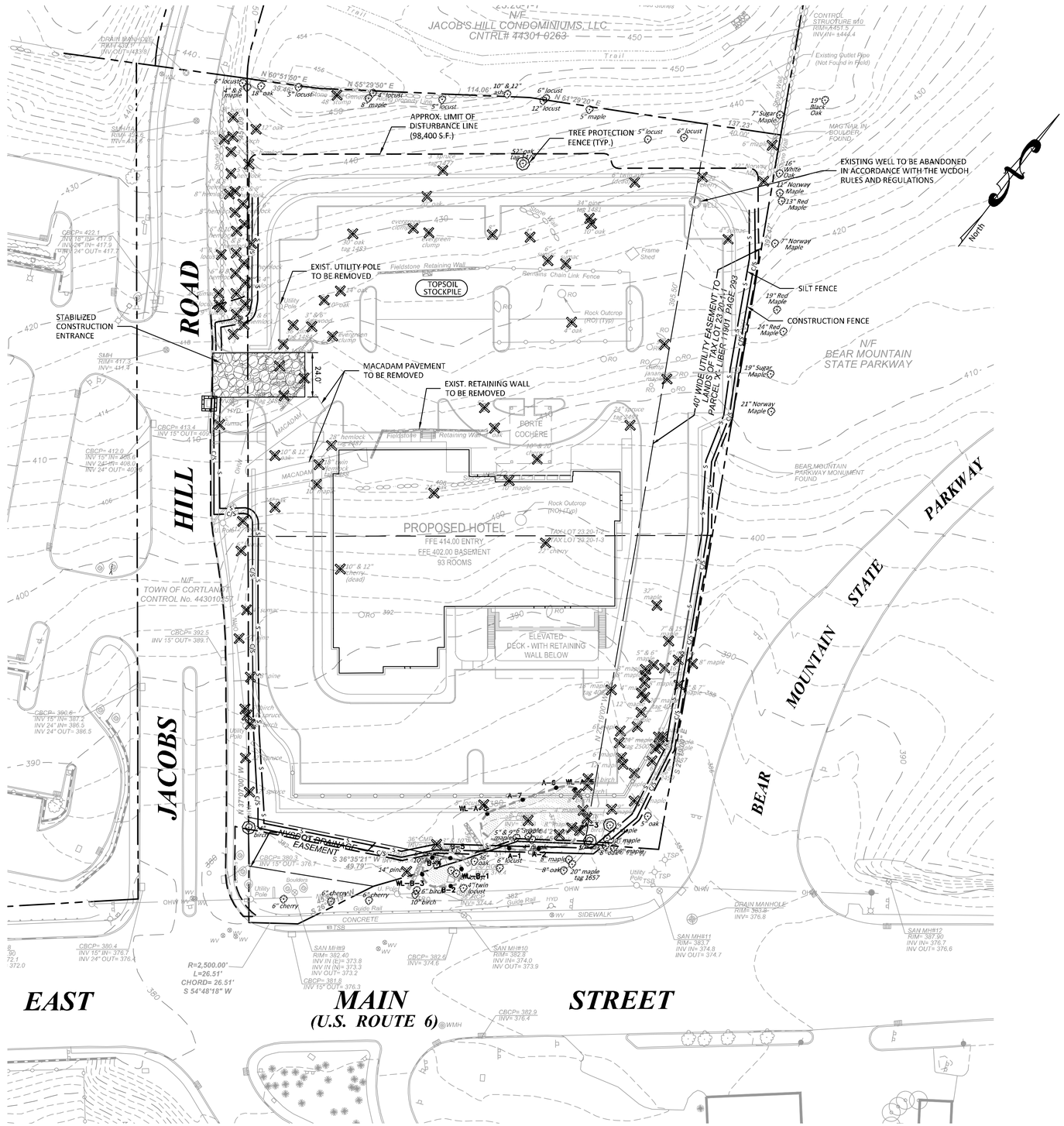


| NO. | REVISION | DATE |
|---|---|---|
| 1 | ISSUED TO PLANNING BOARD | 7/19/2023 |

## EROSION CONTROL LEGEND

- STABILIZED CONSTRUCTION ENTRANCE
- INLET SEDIMENT BAG
- S — SILT FENCE/SEDIMENT BARRIER
- C/S — CONSTRUCTION FENCE
- TREE TO BE PROTECTED
- TREE TO BE REMOVED
- LIMITS OF DISTURBANCE

30 20 10 0 30 60
SCALE IN FEET


Attorney: Zarin & Steinmetz, LLP
81 Main Street, Suite 415
White Plains, NY 10601
Tel: 914-682-7800

Architect: Rod A. VanDerWater Architect, p.c.
7301 Barberry Lane
Manlius, NY 13104
Tel: 315-415-9988

Landscape Architect: Keplinger Freeman Associates, LLC
6320 Fly Road, Suite 109
East Syracuse, NY 13057
Tel: 315-445-7980

Surveyor: Donald R. Stedge, P.L.S.
112 Murray Avenue
Goshen, NY 10924
Tel: 845-325-9734

Owner/applicant: Bilal Ahmad
116 Courtyard Drive
Oneonta, NY 13820
Tel: 315-219-2156

DTS · PROVIDENT
Intelligent Land Use
DTS Provident Design Engineering, LLP
One North Broadway White Plains, NY 10601
P: 914.428.0010
F: 914.428.0017



Under New York State Education Law Article 145 (Engineering), Section 7209 (2), It Is A Violation Of This Law For Any Person, Unless Acting Under The Direction Of A Licensed Professional Engineer, To Alter This Document

© DTS Provident Design Engineering, LLP
Certificate Of Authorization #0017846


CORTLANDT MANOR HOTEL
2054 EAST MAIN STREET
TOWN OF CORTLANDT, NY
Section 23.20, Block: 1, Lots: 2 & 3

TITLE:
# EROSION CONTROL PLAN

Seal: STATE OF NEW YORK · PETER J. GREGORY · NO. 071236 · LICENSED PROFESSIONAL ENGINEER

| | |
|---|---|
| Scale: | 1" = 30' |
| Date: | 04/26/2023 |
| Drawn By: | KMM |
| Checked By: | PJG |
| Project No.: | 1021 |
| Sheet No.: | 8 of 12 |
| Dwg. No.: | C-501 |

O:\PROJECTS-DTSP\1021 - Cortlandt Hotel\AutoCAD\SPA\C-501 Erosion Control Plan.dwg

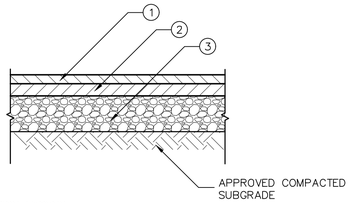


PAVEMENT DESIGN LEGEND:

1. 1 ½" TOP COURSE, NYSDOT ITEM **402.098304, TYPE 9.5 F3**
2. 2" BINDER COURSE, NYSDOT ITEM **402.198904, TYPE 19 F9**
3. 6" SUBBASE COURSE, NYSDOT ITEM **304.14, TYPE 4**

## PAVEMENT DESIGN
NOT TO SCALE

1

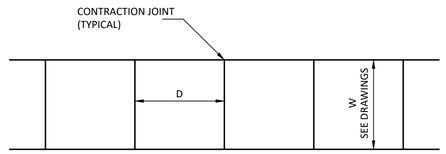


PLAN

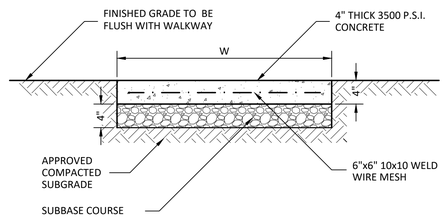


SECTION

NOTE:

1. MINIMUM CROSS SLOPE 1/8"/FT. UNLESS OTHERWISE INDICATED ON THE DRAWINGS.
2. PROVIDE 1/4" PREMOULDED EXPANSION JOINTS AT 20' INTERVALS.

| W | D |
|---|---|
| 3' | 4' |
| 4' | 4' |
| 5' | 5' |
| >5' | 5' |

## CONCRETE CURB
NOT TO SCALE

2

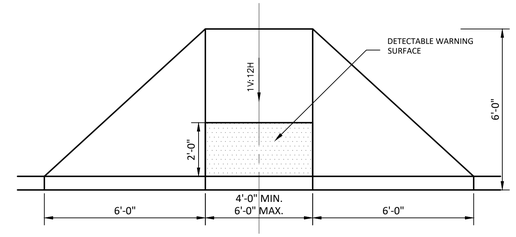


PLAN

NOTE: THE MAXIMUM SLOPE OF THE RAMP SHALL BE 1V:12H

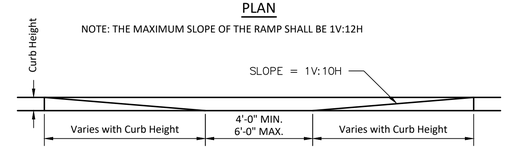


ELEVATION

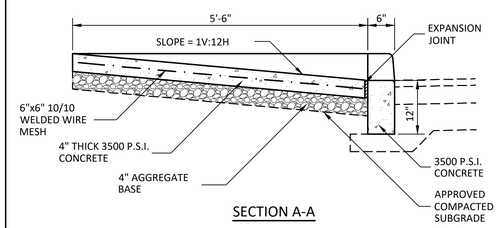


SECTION A-A

## CONCRETE SIDEWALK
NOT TO SCALE

3

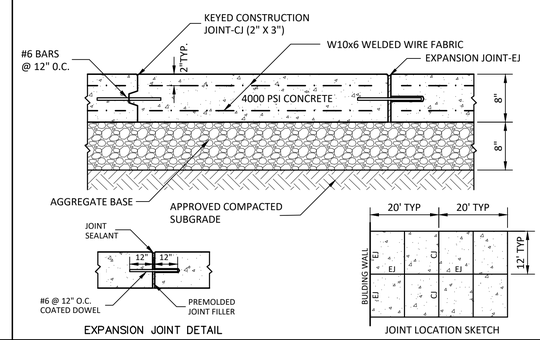


## CURB RAMP
NOT TO SCALE

4

## REINFORCED CONCRETE LOADING AREA PAD
NOT TO SCALE

5

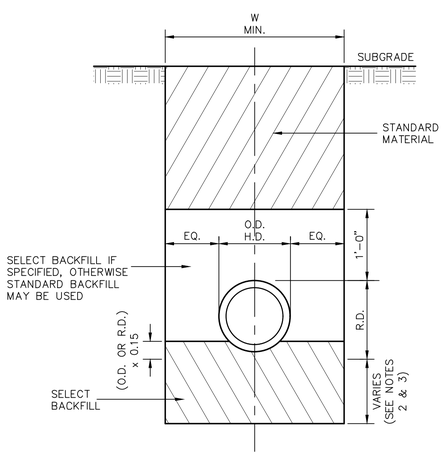


D = INSIDE DIAMETER, SPAN
R.D. = OUTSIDE RISE AT BELL OR BAND
O.D. = OUTSIDE BARREL DIAMETER, SPAN, OR RISE
H.D. = OUTSIDE DIAMETER, SPAN, OR RISE @ BELL OR BAND
W = O.D. +2.0' – CONDUIT 48" OR LESS DIAMETER OR SPAN
W = O.D. +2.5' – CONDUIT GREATER THAN 48" DIAMETER OR SPAN

NOTES:

1. FILL SECTION AREA MUST BE GRADED TO 2'–0" MIN. ABOVE TOP OF PIPE BEFORE EXCAVATING TRENCH.

2. WHERE ROCK IS ENCOUNTERED IN TRENCH BOTTOM, UNDERCUT MIN. OF 12" TO MAX OF 24" (1/2" FOR EACH 1 FT. OF COVER ABOVE O.D. OR R.D.)

3. WHERE UNSUITABLE MATERIAL IS ENCOUNTERED IN TRENCH BOTTOM, UNDERCUT AS DIRECTED BY OWNER'S FIELD REPRESENTATIVE.

4. PAYMENT LIMIT IN ROCK NOT TO EXCEED W (MIN.) AND UNDERCUT EQUALS 24 INCHES.

## PIPE TRENCH EXCAVATION & BACKFILL
NOT TO SCALE

6

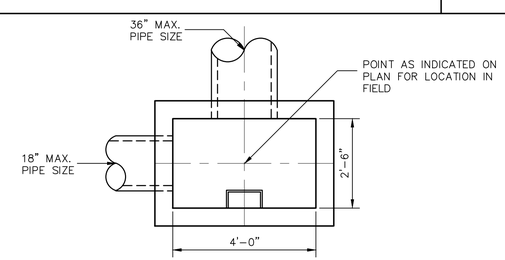


PLAN BELOW GRATE

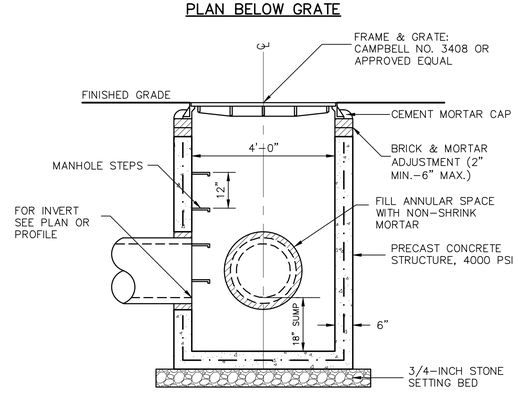


SECTION

NOTES:

1. THE CONTRACTOR SHALL SUBMIT SHOP DRAWINGS OF EACH INLET FOR THE ENGINEERS APPROVAL PRIOR TO FABRICATION.
2. PRECAST INLETS SHALL BE CERTIFIED AS CONFORMING TO ASTM C913, LATEST REVISION.
3. PRECAST INLETS SHALL BE DESIGNED FOR HS–20 LOADING.
4. MANHOLE STEPS ARE NOT REQUIRED FOR INLET DEPTHS LESS THAN 4 FEET.
5. "KNOCKOUT" TYPE INLET STRUCTURES SHALL NOT BE PERMITTED.

## DRAIN INLET (TYPE 1S)
NOT TO SCALE

7

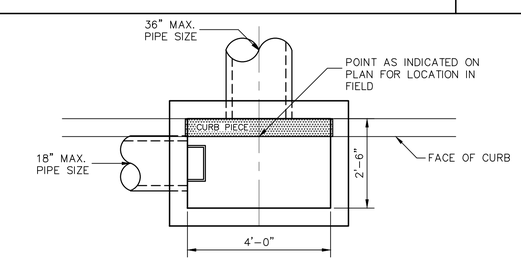


PLAN BELOW GRATE

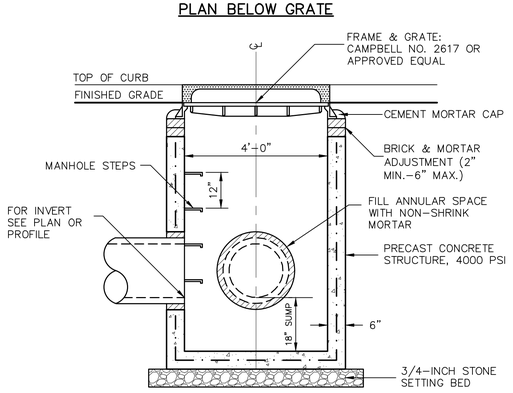


SECTION

NOTES:

1. THE CONTRACTOR SHALL SUBMIT SHOP DRAWINGS OF EACH INLET FOR THE ENGINEERS APPROVAL PRIOR TO FABRICATION.
2. PRECAST INLETS SHALL BE CERTIFIED AS CONFORMING TO ASTM C913, LATEST REVISION.
3. PRECAST INLETS SHALL BE DESIGNED FOR HS–20 LOADING.
4. MANHOLE STEPS ARE NOT REQUIRED FOR INLET DEPTHS LESS THAN 4 FEET.
5. "KNOCKOUT" TYPE INLET STRUCTURES SHALL NOT BE PERMITTED.

## CATCH BASIN (TYPE 1S)
NOT TO SCALE

8

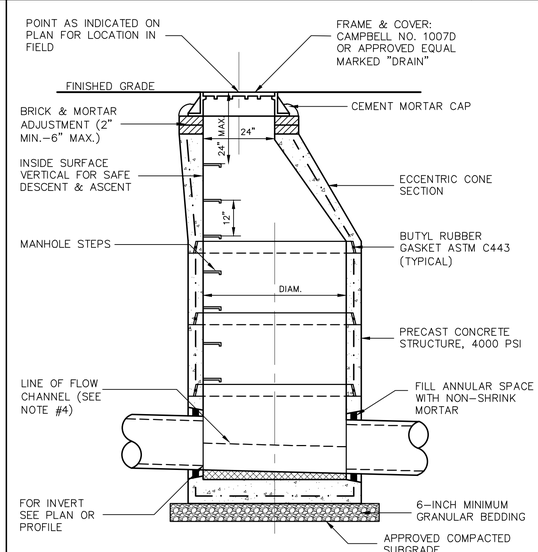


| PIPE SIZE | DIAMETER |
|---|---|
| UP TO 24" | 48" |
| 30" – 36" | 60" |
| 42" – 48" | 72" |

NOTES:

1. THE CONTRACTOR SHALL SUBMIT SHOP DRAWINGS OF EACH MANHOLE FOR THE ENGINEERS APPROVAL PRIOR TO FABRICATION.
2. PRECAST MANHOLE SHALL BE CERTIFIED AS CONFORMING TO ASTM C478 LATEST REVISION.
3. PRECAST MANHOLE SHALL BE DESIGNED FOR HS–20 LOADING.
4. PROVIDE CONCRETE OR BRICK PAVED FLOW CHANNEL CONNECTING INFLOW AND OUTFLOW PIPES.
5. FOR MANHOLE DEPTHS GREATER THAN 6 FEET SEE "STANDARD PRECAST DRAIN MANHOLE".
6. "KNOCKOUT" TYPE MANHOLE STRUCTURES SHALL NOT BE PERMITTED.

## STANDARD PRECAST DRAIN MANHOLE
NOT TO SCALE

9

| NO. | REVISION | DATE |
|---|---|---|
| 1 | ISSUED TO PLANNING BOARD | 7/19/2023 |


Attorney: Zarin & Steinmetz, LLP
81 Main Street, Suite 415
White Plains, NY 10601
Tel: 914-682-7800

Architect: Rod A. VanDerWater Architect, p.c.
7301 Barberry Lane
Manlius, NY 13104
Tel: 315-415-9988

Landscape Architect: Keplinger Freeman Associates, LLC
6320 Fly Road, Suite 109
East Syracuse, NY 13057
Tel: 315-445-7980

Surveyor: Donald R. Stedge, P.L.S.
112 Murray Avenue
Goshen, NY 10924
Tel: 845-325-9734

Owner/applicant: Bilal Ahmad
116 Courtyard Drive
Oneonta, NY 13820
Tel: 315-219-2156

DTS · PROVIDENT
Intelligent Land Use
DTS Provident Design Engineering, LLP
One North Broadway White Plains, NY 10601
P: 914.428.0010
F: 914.428.0017



Under New York State Education Law Article 145 (Engineering), Section 7209 (2), It Is A Violation Of This Law For Any Person, Unless Acting Under The Direction Of A Licensed Professional Engineer, To Alter This Document

© DTS Provident Design Engineering, LLP
Certificate Of Authorization #0017846


# CORTLANDT MANOR HOTEL
2054 EAST MAIN STREET
TOWN OF CORTLANDT, NY
Section 23.20, Block: 1, Lots: 2 & 3

TITLE:
## DETAILS

Seal: STATE OF NEW YORK · PETER J. GREGORY · No. 071226 · LICENSED PROFESSIONAL ENGINEER

| | |
|---|---|
| Scale: | NTS |
| Date: | 04/26/2023 |
| Drawn By: | KMM |
| Checked By: | PJG |
| Project No.: | 1021 |
| Sheet No.: | 9 of 12 |
| Dwg. No.: | C-601 |

O:\PROJECTS-DTSP\1021 - Cortlandt Hotel\AutoCAD\SPA\C-60x Details Base.dwg

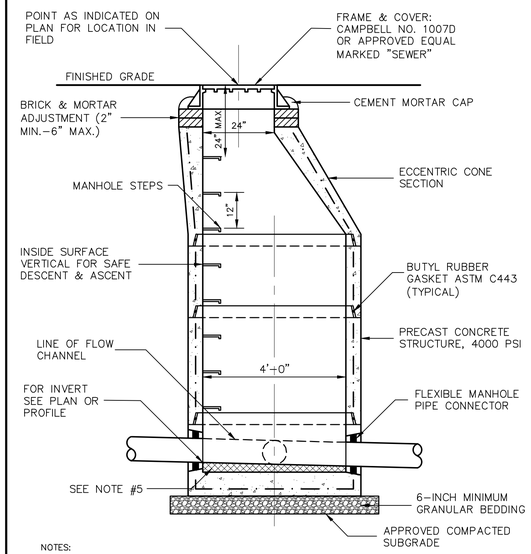


NOTES:

1. THE CONTRACTOR SHALL SUBMIT A SHOP DRAWING OF EACH MANHOLE FOR THE ENGINEERS APPROVAL PRIOR TO FABRICATION.
2. PRECAST MANHOLES SHALL BE CERTIFIED AS CONFORMING TO ASTM C478, LATEST REVISION.
3. PRECAST MANHOLES SHALL BE DESIGNED FOR HS–20 LOADING.
4. THE ENTIRE EXTERIOR SURFACE OF ALL MANHOLES SHALL BE COATED WITH TWO (2) COATS OF AN APPROVED BITUMASTIC MATERIAL TO PRODUCE A DRY FILM THICKNESS OF 0.07 INCHES (70 MILS) PER COAT.
5. PROVIDE CONCRETE OR BRICK PAVED FLOW CHANNEL CONNECTING INFLOW AND OUTFLOW PIPES, MINIMUM DROP SHALL BE 0.10'. SEE "MANHOLE BASE PLAN".
6. FOR INVERT DROPS GREATER THAN 2'–0" SEE STANDARD DROP CONNECTION DETAIL.
7. FOR MANHOLE DEPTHS LESS THAN 6 FEET SEE "SHALLOW PRECAST SANITARY MANHOLE".
8. PIPE CONNECTIONS TO MANHOLE SHALL CONFORM TO ASTM C923, "RESILIENT CONNECTORS BETWEEN REINFORCED CONCRETE MANHOLES AND PIPES".
9. "KNOCKOUT" TYPE MANHOLE STRUCTURES SHALL NOT BE PERMITTED.

STANDARD PRECAST SANITARY MANHOLE (SMH)
NOT TO SCALE
1

2009 MUTCD: FIGURE 3B–22

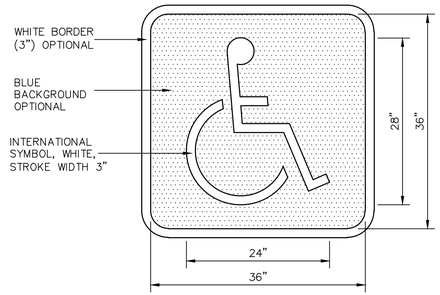


ACCESSIBLE PAVEMENT MARKING SYMBOL
NOT TO SCALE
2

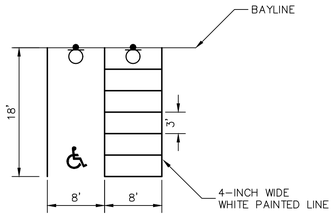


ACCESSIBLE PARKING STALL LAYOUT

| STALL TYPE | W | L |
|---|---|---|
| STANDARD | 9'–0" | 18'–0" |

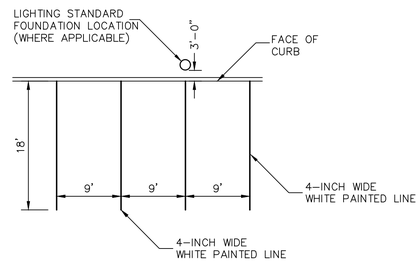


STANDARD PARKING STALL LAYOUT

90 DEGREE PARKING STALL LAYOUT
NOT TO SCALE
3

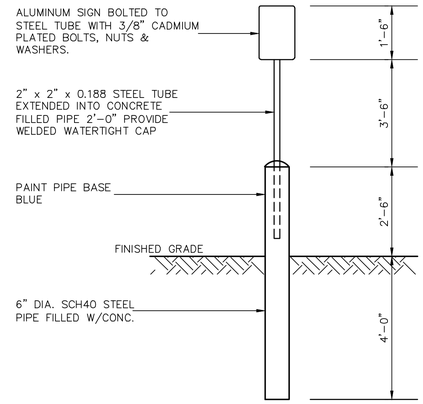


NOTE

1. "RESERVED PARKING" SIGN SHALL CONFORM WITH STATE AND LOCAL CODES.

HANDICAP PARKING SIGN & FOUNDATION
NOT TO SCALE
4

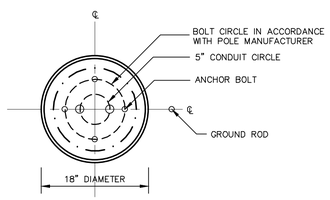


PLAN

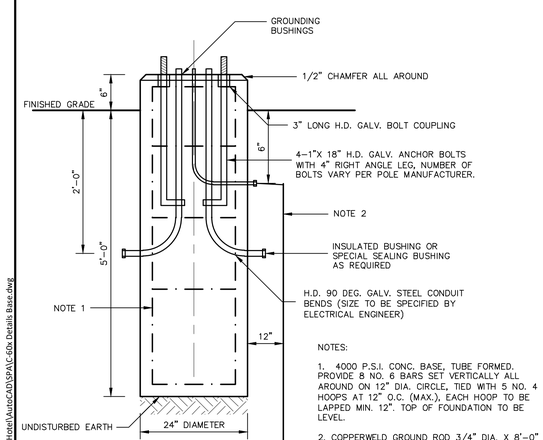


ELEVATION

NOTES:

1. 4000 P.S.I. CONC. BASE, TUBE FORMED. PROVIDE 8 NO. 6 BARS SET VERTICALLY ALL AROUND ON 12" DIA. CIRCLE, TIED WITH 5 NO. 4 HOOPS AT 12" O.C. (MAX.), EACH HOOP TO BE LAPPED MIN. 12". TOP OF FOUNDATION TO BE LEVEL.

2. COPPERWELD GROUND ROD 3/4" DIA. X 8'–0" LONG CAST IN FOUNDATION. BOND TRANS–FORMER BASE, CONDUIT BUSHINGS & BALLAST CASING TO GROUND ROD BY MEANS OF NO. 8 BARE STRANDED GROUND WIRE EXOTHERMICALLY WELDED.

LIGHT POLE FOUNDATION
NOT TO SCALE
5

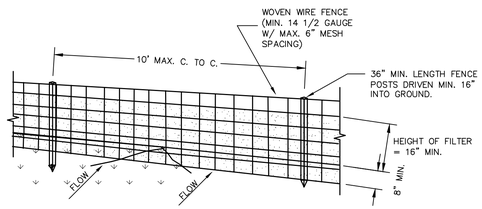


PERSPECTIVE VIEW

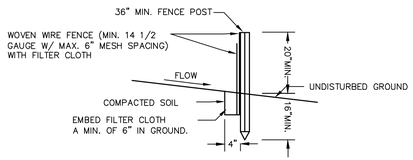


SECTION VIEW

CONSTRUCTION SPECIFICATIONS

1. WOVEN WIRE FENCE TO BE FASTENED SECURELY TO FENCE POSTS WITH WIRE TIES OR STAPLES. POSTS SHALL BE STEEL EITHER "T" OR "U" TYPE OR HARDWOOD.
2. FILTER CLOTH TO BE TO BE FASTENED SECURELY TO WOVEN WIRE FENCE WITH TIES SPACED EVERY 24" AT TOP AND MID SECTION. FENCE SHALL BE WOVEN WIRE, 12 1/2 GAUGE, 6" MAXIMUM MESH OPENING.
3. WHEN TWO SECTIONS OF FILTER CLOTH ADJOIN EACH OTHER THEY SHALL BE OVER–LAPPED BY SIX INCHES AND FOLDED. FILTER CLOTH SHALL BE EITHER FILTER X, MIRAFI 100X, STABILINKA T140N, OR APPROVED EQUIVALENT.
4. PREFABRICATED UNITS SHALL BE GEOFAB, ENVIROFENCE, OR APPROVED EQUIVALENT.
5. MAINTENANCE SHALL BE PERFORMED AS NEEDED AND MATERIAL REMOVED WHEN "BULGES" DEVELOP IN THE SILT FENCE.

SILT FENCE
NOT TO SCALE
6

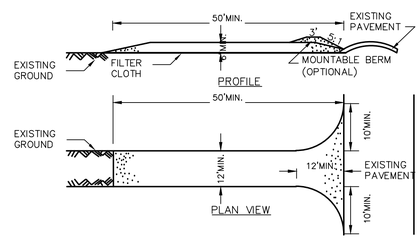


CONSTRUCTION SPECIFICATIONS

1. STONE SIZE – USE 1–4" STONE, OR RECLAIMED OR RECYCLED CONCRETE EQUIVALENT.
2. LENGTH – NOT LESS THAN 50 FEET (EXCEPT ON A SINGLE RESIDENCE LOT WHERE A 30 FOOT MINIMUM LENGTH WOULD APPLY).
3. THICKNESS – NOT LESS THAN SIX (6) INCHES.
4. WIDTH – TWELVE (12) FOOT MINIMUM, BUT NOT LESS THAN THE FULL WIDTH AT POINTS WHERE INGRESS OR EGRESS OCCURS. TWENTY–FOUR (24) FOOT IF SINGLE ENTRANCE TO SITE.
5. FILTER CLOTH – WILL BE PLACED OVER THE ENTIRE AREA PRIOR TO PLACING OF STONE.
6. SURFACE WATER – ALL SURFACE WATER FLOWING OR DIVERTED TOWARD CONSTRUCTION ENTRANCES SHALL BE PIPED ACROSS THE ENTRANCE. IF PIPING IS IMPRACTICAL, A MOUNTABLE BERM WITH 5:1 SLOPES WILL BE PERMITTED.
7. MAINTENANCE – THE ENTRANCE SHALL BE MAINTAINED IN A CONDITION WHICH WILL PREVENT TRACKING OR FLOWING OF SEDIMENT ONTO PUBLIC RIGHTS–OF–WAY, ALL SEDIMENT SPILLED, DROPPED, WASHED OR TRACTED ONTO PUBLIC RIGHTS–OF–WAY MUST BE REMOVED IMMEDIATELY.
8. WHEN WASHING IS REQUIRED, IT SHALL BE DONE ON A AREA STABILIZED WITH STONE AND WHICH DRAINS INTO AN APPROVED SEDIMENT TRAPPING DEVICE.
9. PERIODIC INSPECTION AND NEEDED MAINTENANCE SHALL BE PROVIDED AFTER EACH RAIN.

STABILIZED CONSTRUCTION ENTRANCE
NOT TO SCALE
7

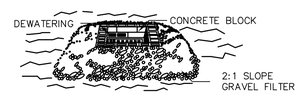


STONE & BLOCK PLAN VIEW

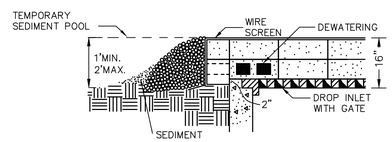


STONE & BLOCK DETAIL

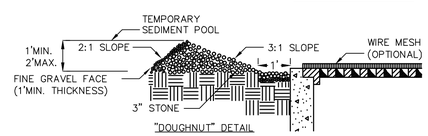


CONSTRUCTION SPECIFICATIONS

1. LAY ONE BLOCK ON EACH SIDE OF THE STRUCTURE ON ITS SIDE FOR DEWATERING.FOUNDATION SHALL BE 2 INCHES MINIMUM BELOW REST OF INLET AND BLOCKS SHALL BE PLACED AGAINST INLET FOR SUPPORT.
2. HARDWARE CLOTH OR 1/2" WIRE MESH SHALL BE PLACED OVER BLOCK OPENINGS TO SUPPORT STONE.
3. USE CLEAN STONE OR GRAVEL 1/2–3/4 INCH IN DIAMETER PLACED 2 INCHES BELOW TOP OF THE BLOCK ON A 2:1 SLOPE OR FLATTER.
4. FOR STONE STRUCTURES ONLY, A 1 FOOT THICK LAYER OF THE FILTER STONE WILL BE PLACED AGAINST THE 3 INCH STONE AS SHOWN ON THE DRAWINGS.

MAXIMUM DRAINAGE AREA 1 ACRE

STONE & BLOCK DROP INLET PROTECTION
NOT TO SCALE
8

| NO. | REVISION | DATE |
|---|---|---|
| 1 | ISSUED TO PLANNING BOARD | 7/19/2023 |


Attorney: Zarin & Steinmetz, LLP
81 Main Street, Suite 415
White Plains, NY 10601
Tel: 914-682-7800

Architect: Rod A. VanDerWater Architect, p.c.
7301 Barberry Lane
Manlius, NY 13104
Tel: 315-415-9988

Landscape Architect: Keplinger Freeman Associates, LLC
6320 Fly Road, Suite 109
East Syracuse, NY 13057
Tel: 315-445-7980

Surveyor: Donald R. Stedge, P.L.S.
112 Murray Avenue
Goshen, NY 10924
Tel: 845-325-9734

Owner/applicant: Bilal Ahmad
116 Courtyard Drive
Oneonta, NY 13820
Tel: 315-219-2156

DTS • PROVIDENT
Intelligent Land Use
DTS Provident Design Engineering, LLP
One North Broadway White Plains, NY 10601
P: 914.428.0010
F: 914.428.0017



Under New York State Education Law Article 145 (Engineering), Section 7209 (2), It Is A Violation Of This Law For Any Person, Unless Acting Under The Direction Of A Licensed Professional Engineer, To Alter This Document

© DTS Provident Design Engineering, LLP
Certificate Of Authorization #0017846


CORTLANDT MANOR HOTEL
2054 EAST MAIN STREET
TOWN OF CORTLANDT, NY
Section 23.20, Block: 1, Lots: 2 & 3

TITLE:
DETAILS

Seal: STATE OF NEW YORK · PETER J. GREGORY · No. 071228 · LICENSED PROFESSIONAL ENGINEER

| | |
|---|---|
| Scale: | NTS |
| Date: | 04/26/2023 |
| Drawn By: | KMM |
| Checked By: | PJG |
| Project No.: | 1021 |
| Sheet No.: | 10 of 12 |
| Dwg. No.: | C-602 |

Q:\PROJECTS-DTS\1021 - Cortlandt Hotel\AutoCAD\SPA\C-60x Details Base.dwg

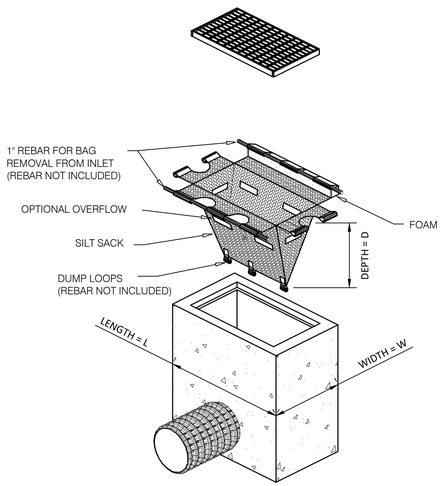


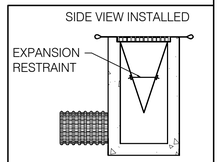


INSTALLATION DETAIL

NOTE:
THE SILT SACK WILL BE MANUFACTURED FROM A WOVEN POLYPROPYLENE FABRIC. SEE SPECIFICATIONS.

## CATCH BASIN SILT SACK
NOT TO SCALE

1

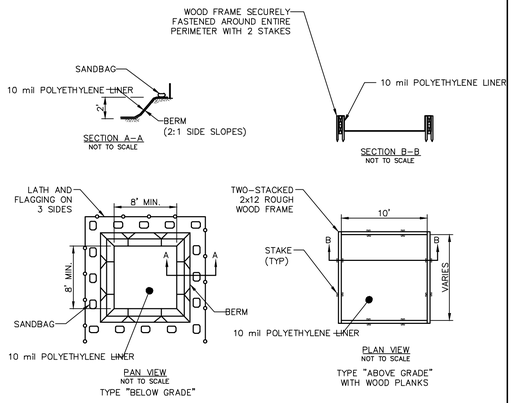


INSTALLATION NOTES:

1. LOCATE THE WASHOUT STRUCTURE A MINIMUM OF 50 FEET FROM DRAINAGE SWALES, STORM DRAIN INLETS, OR WATER RESOURCES.
2. PREVENT SURFACE RUNOFF FROM ENTERING THE STRUCTURE EXCEPT FROM ACCESS ROAD.
3. PROVIDE APPROPRIATE ACCESS WITH A GRAVEL ACCESS ROAD SLOPED DOWNWARD TO THE STRUCTURE AT THE PARKED LOCATION FOR WASHOUT.
4. THE LINER (OR REPLACEMENT AFTER CLEANOUT) SHALL BE FREE OF HOLES, TEARS, OR ANT DEFECT THAT COULD ALLOW ESCAPE OF THE CONTAINED MATERIAL PRIOR TO SOLIDIFYING.
5. IF PRE–FABRICATED WASHOUTS ARE USED THEY MUST ENSURE THE CAPTURE AND CONTAINMENT OF THE CONCRETE WASH AND BE SIZED BASED ON THE EXPECTED FREQUENCY OF CONCRETE POURS. THEY SHALL BE SITED AS NOTED ABOVE.

## NYS CONCRETE TRUCK WASHOUT
NOT TO SCALE

2

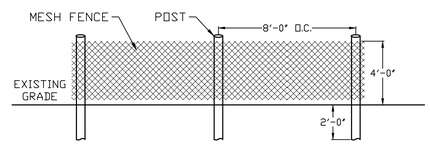


INSTALLATION NOTES:
1) MESH TO BE PLACED ON "OUTSIDE" FACE OF POST TO RENDER NON-CLIMABLE
2) MESH COLOR TO BE BLAZE ORANGE

## TYPICAL ORANGE MESH CONSTRUCTION FENCE
NOT TO SCALE

3

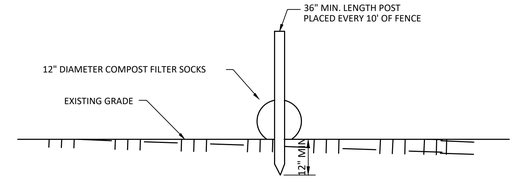


INSTALLATION NOTES:

1. LAND SURFACE SHOULD BE PREPARED BY MOWING GRASS OR MAKING SOIL OR PAVED SURFACES SMOOTH.
2. COMPOST FILTER SOCKS SHALL BE PLACED PERPENDICULAR TO STORM WATER FLOW, ACROSS THE SLOPE, SWALE, DITCH OR CHANNEL.
3. COMPOST FILTER SOCKS SHALL BE PLACED ON CONTOURS.
4. ON SOIL AND VEGETATED SURFACES, UNDER SHEET FLOW CONDITIONS, COMPOST FILTER SOCKS SHALL BE STAKED ON 10-FOOT CENTERS. UNDER CONCENTRATED FLOW CONDITIONS COMPOSITE FILTER SOCKS SHALL BE STAKED ON 5-FOOT CENTERS.
5. STAKES SHALL BE DRIVEN THROUGH THE CENTER OF THE COMPOST FILTER SOCK AND INSTALLED A MINIMUM OF 8 INCHES AND A MAXIMUM OF 12 INCHES INTO THE EXISTING SOIL, LEAVING A MINIMUM STAKE HEIGHT OF 2 INCHES ABOVE OF THE COMPOST FILTER SOCK.
6. CARE SHALL BE TAKEN TO ENSURE THAT THE STAKES DO NOT PENETRATE THE LANDFILL LINER.
7. STAKES SHALL BE 2 INCHES BY 2 INCHES HARDWOOD STAKES.
8. EDGES OF THE COMPOST FILTER SOCKS SHALL BE TURNED UPSLOPE TO PREVENT FLOW AROUND THE ENDS OF THE COMPOST FILTER SOCKS.

REMOVAL NOTES:

1. UPON REMOVAL OF THE COMPOST FILTER SOCK, THE CONTRACTOR SHALL REMOVE ALL SEDIMENT ACCUMULATION PRIOR TO THE REMOVAL OF THE COMPOST FILTER SOCK. THE COMPOST FILTER SOCKS SHALL BE REMOVED IN THEIR ENTIRETY.
2. THE DISTURBED AREA SHALL BE SEEDED FERTILIZED AND MULCHED TO ENSURE THE VEGETATIVE COVER IS FULLY RESTORED.
3. MONITOR THE VEGETATIVE RESTORATION AREA UNTIL EXPOSED AREAS ARE FULLY STABILIZED WITH VEGETATIVE COVER.
4. THE COMPOST MATERIAL MAY BE SPREAD OVER THE LANDSCAPE OR INCORPORATED INTO THE SOIL AT THE END OF THE PROJECT, THEREBY INCREASING SOIL QUALITY AND REDUCING WASTE.
5. THE SOCK MESH SHALL BE PROPERLY DISPOSED.

## COMPOST FILTER SOCK
NOT TO SCALE

4

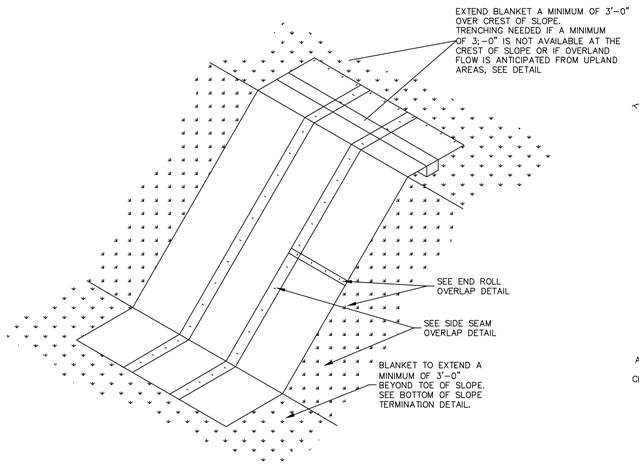


SLOPE DETAIL

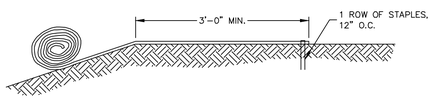


SLOPE TRENCH METHOD "A" (NO TRENCH)

DO NOT NEED TO TRENCH BLANKET IF IT CAN BE EXTENDED A MINIMUM OF 3'–0" OVER THE CREST OF THE SLOPE.

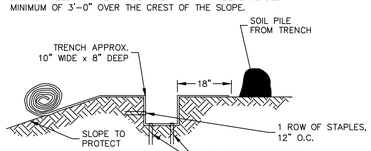


STEP 1

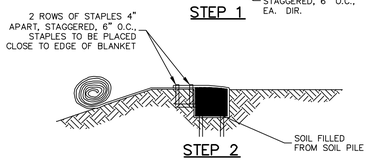


STEP 2

SLOPE TRENCH METHOD "B"

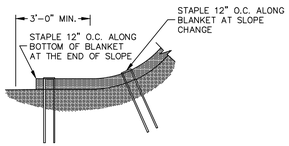


BOTTOM OF SLOPE TERMINATION

NOTES:

1. STAPLE PATTERNS ARE DEPENDENT ON SITE CONDITIONS. REFER TO MANUFACTURER INSTALLATION REQUIREMENTS.
2. E–STAPLE MAY BE USED IN PLACE OF WIRE STAPLES.

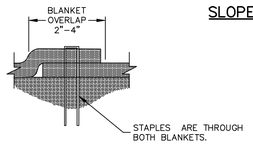


SIDE SEAM OVERLAP STAPLE DETAIL

END SEAM OF BLANKETS OVERLAP 2"–4". PLACE STAPLES, ONE ON EACH CORNER OF BLANKET, 12" O.C. ALONG BLANKET END THROUGH BOTH BLANKETS. UPSLOPE BLANKET LAPS OVER DOWNSLOPE BLANKETS IN A SHINGLE AFFECT.

END ROLL OVERLAP

## SLOPE STABILIZATION
NOT TO SCALE

5

FENCING AND ARMORING

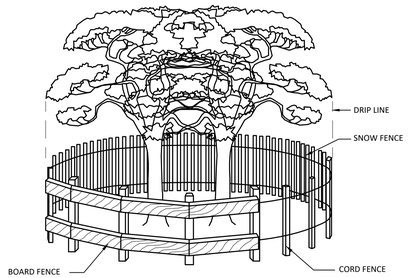


CORRECT METHODS OF TREE FENCING

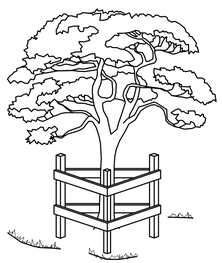

TRIANGULAR BOARD FENCE

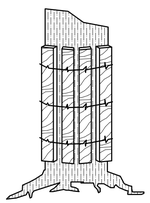

CORRECT TRUNK ARMORING

## TREE ARMORING
NOT TO SCALE

| NO. | REVISION | DATE |
|---|---|---|
| 1 | ISSUED TO PLANNING BOARD | 7/19/2023 |


Attorney: Zarin & Steinmetz, LLP
81 Main Street, Suite 415
White Plains, NY 10601
Tel: 914-682-7800

Architect: Rod A. VanDerWater Architect, p.c.
7301 Barberry Lane
Manlius, NY 13104
Tel: 315-415-9988

Landscape Architect: Keplinger Freeman Associates, LLC
6320 Fly Road, Suite 109
East Syracuse, NY 13057
Tel: 315-445-7980

Surveyor: Donald R. Stedge, P.L.S.
112 Murray Avenue
Goshen, NY 10924
Tel: 845-325-9734

Owner/applicant: Bilal Ahmad
116 Courtyard Drive
Oneonta, NY 13820
Tel: 315-219-2156

DTS · PROVIDENT
Intelligent Land Use
DTS Provident Design Engineering, LLP
One North Broadway White Plains, NY 10601
P: 914.428.0010
F: 914.428.0017



Under New York State Education Law Article 145 (Engineering), Section 7209 (2), It Is A Violation Of This Law For Any Person, Unless Acting Under The Direction Of A Licensed Professional Engineer, To Alter This Document

© DTS Provident Design Engineering, LLP
Certificate Of Authorization #0017846


CORTLANDT MANOR HOTEL
2054 EAST MAIN STREET
TOWN OF CORTLANDT, NY
Section 23.20, Block: 1, Lots: 2 & 3

TITLE:
DETAILS

Seal: STATE OF NEW YORK · PETER J. GREGORY · No. 071228 · LICENSED PROFESSIONAL ENGINEER

| | |
|---|---|
| Scale: | NTS |
| Date: | 04/26/2023 |
| Drawn By: | KMM |
| Checked By: | PJG |
| Project No.: | 1021 |
| Sheet No.: | 11 of 12 |
| Dwg. No.: | C-603 |

Q:\PROJECTS-DTS\1021 - Cortlandt Hotel\AutoCAD\SPA\C-60x Details Base.dwg

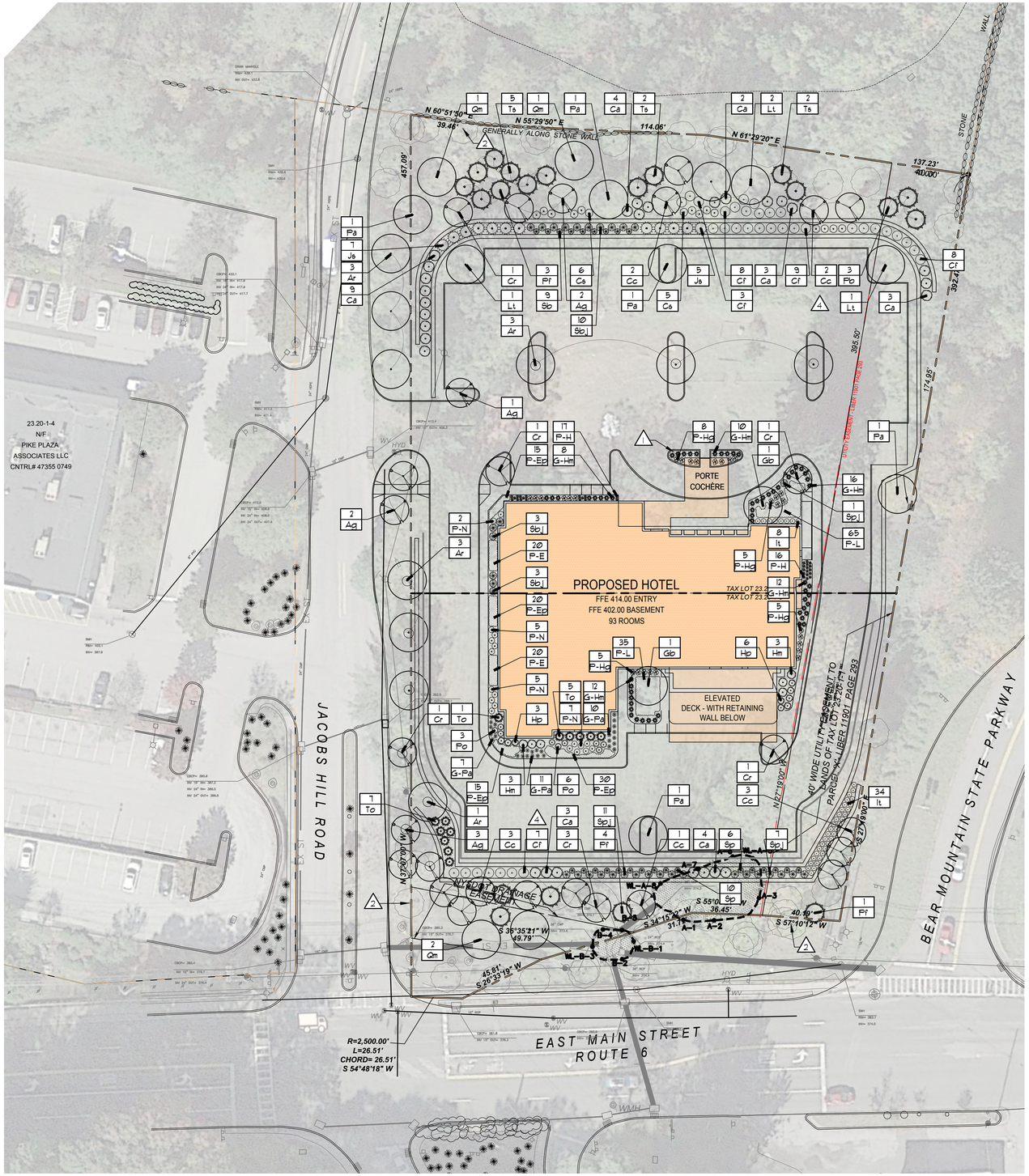


## PLANT LIST

L3.0-PLANT-LIST

| KEY | COMMON NAME | BOTANICAL NAME | CALIPER | HEIGHT | CONDITION |
|---|---|---|---|---|---|
| **TREES** | | | | | |
| Ag | AUTUMN BRILLIANCE SERVICEBERRY | AMELANCHIER GRANDIFOLIUM 'AUTUMN BRILLIANCE' | 2-1/2" CAL. | - | B&B |
| Ar | AUTUMN BLAZE RED MAPLE | ACER X FREEMANI 'AUTUMN BLAZE' | 2 1/2" CAL. | - | B&B |
| Cr | STELLAR PINK DOGWOOD | CORNUS X RUTGERENSIS 'STELLAR PINK' | - | 6-8' | B&B |
| Cc | EASTERN REDBUD | CERCIS CANADENSIS | - | 6-8' | B&B |
| Gb | PRINCETON SENTRY GINKGO | GINKGO BILOBA 'PRINCETON SENTRY' | 1-1/2" CAL. | - | B&B SINGLE STEM |
| Lt | TULIPTREE | LIRIODENDRON TULIPIFERA | 2-1/2" CAL. | - | B&B |
| Pa | LONDON PLANETREE | PLATANUS X ACERIFOLIA | 2-1/2" CAL. | - | B&B |
| Pb | BRUNS SERBIAN SPRUCE | PICEA OMORIKA 'BRUNS' | - | 8-10' | B&B |
| Pf | VANDERWOLF'S PYRAMID LIMBER PINE | PINUS FLEXILIS 'VANDERWOLF'S PYRAMID' | - | 6-8' | B&B |
| Qm | CHINKAPIN OAK | QUERCUS MUEHLENBERGII | 2-1/2" CAL. | - | B&B |
| Ts | GREEN GIANT ARBORVITAE | THUJA STANDISHII X PLICATA | - | 6-8' | B&B |
| **SHRUBS** | | | | | |
| Ca | PINK SUMMERSWEET | CLETHRA ALNIFOLIA ROSEA | - | - | 3 GAL. |
| Cf | YELLOW TWIG DOGWOOD | CORNUS SERICEA 'FLAVIRAMEA' | - | - | 3 GAL. |
| Cs | RED TWIG DOGWOOD | CORNUS ALBA 'SIBIRICA' | - | - | 3 GAL. |
| Iv | LITTLE HENRY DWARF VIRGINIA SWEETSPIRE | ITEA VIRGINICA 'SPRICH' | - | - | 3 GAL. |
| Js | BROADMOOR JUNIPER | JUNIPERUS SABINA 'BROADMOOR' | - | | 3 GAL. |
| Hm | ENDLESS SUMMER HYDRANGEA | HYDRANGEA MACROPHYLLA 'ENDLESS SUMMER' | - | 24"-36" | - |
| Hp | PEPPER MINT SWIRL HYDRANGEA | HYDRANGEA MACROPHYLLA 'PEPPERMINT SWIRL' | - | 24"-36" | - |
| Pn | TINY WINE NINEBARK | PHYSOCARPUS OPULIFOLIUS 'TINY WINE' | - | - | 3 GAL. |
| Sb | GOLD FLAME SPIREA | SPIREA BUMALDA 'GOLD FLAME' | - | 18"-24" | - |
| Sbj | GOLDMOUND SPIREA | SPIREA JAPONICA 'GOLDMOUND' | - | - | 3 GAL. |
| To | LITTLE GIANT DWARF ARBORVITAE | THUJA OCCIDENTALIS 'LITTLE GIANT' | - | 18"-24" | - |
| **PERENNIALS and GRASSES** | | | | | |
| G-Hm | HAKONE GRASS | HAKONECHLOA MACRA | - | - | 2 GAL. |
| G-Pa | LITTLE BUNNY FOUNTAIN GRASS | PENNISETUM ALOPECUROIDES 'LITTLE BUNNY' | - | - | 2 GAL. |
| P-E | KIM'S KNEE HIGH CONEFLOWER | ECHINACEA PURPUREA 'KIM'S KNEE HIGH' | | 18"-24" | - |
| P-Ep | DWARF WHITE CONEFLOWER | ECHINACEA PURPUREA 'WHITE SWAN' | - | - | 1 GAL |
| P-H | HOSTA 'BLUE MOUSE EARS' | HOSTA X 'BLUE MOUSE EARS' | - | - | 1 GAL |
| P-Hg | GOLD DROP HOSTA | HOSTA GOLD DROP | - | - | 1 GAL. |
| P-L | LILYTURF | LIRIOPE MUSCARI 'BIG BLUE' | - | - | PLUG |
| P-N | CATMINT | NEPATA RACEMOSA 'CATS PAJAMAS' | - | - | 2 GAL. |

## PLANT NOTES

1. 3" DEPTH SHREDDED BARK MULCH WITH 18" OF SCREENED TOPSOIL.
2. SEE TREE PROTECTION PLAN FOR EXTENT OF TREE REMOVALS, ONLY EXISTING TREES TO REMAIN ARE SHOWN ON THIS PLAN.
3. INSTALL LANDSCAPE EDGING AS SPECIFIED.
4. SHOULD LABELS AND SYMBOLS HAVE A DISCREPANCY, SYMBOLS PREVAIL IN NUMBER OF PLANTS.

0 30 60 90
SCALE IN FEET

KEPLINGER FREEMAN ASSOCIATES
LANDSCAPE ARCHITECTURE & LAND PLANNING
6320 FLY ROAD, SUITE 109 EAST SYRACUSE, NEW YORK 13057
PHONE: (315) 445-7980 FAX: (315) 445-7981

DTS • PROVIDENT
Intelligent Land Use
ONE NORTH BROADWAY, WHITE PLAINS, NEW YORK 10601
PHONE: (914) 428-0010

NOT FOR CONSTRUCTION

REGISTERED LANDSCAPE ARCHITECT
EDWARD GILBERT KEPLINGER
001633
STATE OF NEW YORK

Client:
BILAL AHMAD
116 COURTYARD DRIVE
ONEONTA NY 13820

PB SUBMISSION
NOT FOR CONSTRUCTION

# CORTLANDT MANOR

2054 EAST MAIN STREET
CORTLANDT, NEW YORK 10567

REVISIONS

PB SUBMISSION II - 11/21/22
TREE PROTECT. PLAN - 11/28/22
UPDATED SITE PLAN - 1/5/23
ZBA PLAN - 1/18/23
ZBA PUBLIC HEARING - 2/16/23
ZBA RESUBMISSION - 2/21/23
PB PRESENTATION - 4/4/23
PB SUBMISSION - 4/26/23
ISSUED TO PB - 7/19/23

| | |
|---|---|
| Drawn By: | C.R.F |
| Checked By: | E.G.K. |
| KFA Proj. No.: | 41108 |
| Date: | OCTOBER 19, 2022 |
| Scale: | AS NOTED |

Title:
LANDSCAPE PLAN

C-701